RECEIVED
JAN 26 2012
LANCASTER COUNTY
CLERK

BEFORE THE BOARD OF COUNTY COMMISSIONERS
OF LANCASTER COUNTY, NEBRASKA

IN THE MATTER OF ADOPTING THE 2009 EDITION OF THE UNIFORM PLUMBING CODE AND THE NEW FEE SCHEDULE FOR PLUMBING PERMITS	)))))	RESOLUTION NO. R-12-0008

WHEREAS, Lancaster County, Nebraska, (the "County"), may adopt construction codes by virtue of Neb. Rev. Stat. § 23-172 (Reissue 2007), as amended, which are applicable throughout all of the County except within the jurisdiction of any incorporated city or village, and except within an unincorporated area where a city or village has been granted zoning jurisdiction and is exercising such jurisdiction; and

WHEREAS, the County, pursuant to the Interlocal Cooperation Act, Neb. Rev. Stat. § 13-801 *et seq.* (Reissue 2007), has entered into an agreement with the City of Lincoln (the "City"), providing for enforcement of the County construction codes by the City Codes Administration; and

WHEREAS, one of the provisions of said agreement requires that the County adopt construction codes which have been adopted by the City, in order to provide a uniform code for permit and inspection purposes; and

WHEREAS, the City adopted the 2009 Edition of the Uniform Plumbing Code, with certain amendments and deletions thereto; and

WHEREAS, on January 31, 2012, the Lancaster County Board of Commissioners conducted a public hearing regarding adoption of such construction code and fee schedule for the abovementioned services and permits provided within Lancaster County's zoning jurisdiction; and

WHEREAS, pursuant to Neb. Rev. Stat. § 23-172, the adoption of any standard code by reference shall be construed to incorporate such amendments thereof as may be made if the copy of such standard code is kept current in the office of the County Clerk.

NOW, THEREFORE, BE IT RESOLVED, by the Board of County Commissioners of Lancaster County that the Uniform Plumbing Code (2009 Edition), including the Fee Schedule for plumbing permits, adopted by the City and attached hereto as "Exhibit A", is incorporated in full by this reference and is hereby adopted for use in the County's zoning jurisdiction.

BE IT FURTHER RESOLVED that a copy of said Code described herein, be placed on file in the Office of the County Clerk pursuant to Neb. Rev. Stat. § 23-172.

BE IT FURTHER RESOLVED that this Resolution hereby replaces and rescinds County Resolution No. 10-0050 and any previously existing County Plumbing Permit Fee Schedules.

DATED this 31 day of January, 2012, at the County-City Building, Lincoln, Lancaster County Nebraska.

BY THE BOARD OF COUNTY
COMMISSIONERS OF LANCASTER
COUNTY, NEBRASKA

APPROVED AS TO FORM
this 31 day of
January, 2012.

Brittany Behrens
for JOE KELLY
Lancaster County Attorney

Jane Young

Deb Schorr

Larry Hudkins

Bob Smith

Heier Absent

Chapter 24.10

LINCOLN PLUMBING CODE

EXHIBIT

A

Sections:

24.10.005	Adoption of 2009 Uniform Plumbing Code.
24.10.010	Green Plumbing & Mechanical Code Supplement Added as Reference.
24.10.015	Section 101.0 Amended; Title, Purpose and Scope.
24.10.020	Section 102.0 Amended; Organization and Enforcement.
24.10.025	Section 103 Amended; Inspections and Tests.
24.10.030	Section 104.0 Added; Permit Required.
24.10.035	Section 105.0 Added; Plumbing Board of Appeals.
24.10.040	Section 106.0 Added; Examining Board of Plumbers.
24.10.045	Section 107.0 Added; Registration of Plumbers.
24.10.050	Section 108.0 Added; Certificate of Insurance.
24.10.055	Section 109.0 Added; Sanitary Sewer Connection.
24.10.065	Section 218.0 Amended; Definitions - P.
24.10.070	Section 220.0 Amended; Definitions - R.
24.10.075	Section 224.0 Amended; Definitions - V.
24.10.080	Section 311.1 Amended; Drainage Fitting.
24.10.085	Section 311.3 Deleted; Waste Connection.
24.10.090	Section 311.4 Deleted; Vent Pipe.
24.10.095	Section 311.8 Amended; Screwed Fittings.
24.10.100	Section 312.1 Added; Structures Considered as One Building.
24.10.105	Section 315.4 Amended; Trenching, Excavation, and Backfill.
24.10.110	Section 401.2 Amended; Lead.
24.10.115	Section 402.3.1 Deleted; Nonwater Urinals.
24.10.120	Section 405.2 Exception Deleted; Prohibited Urinals.
24.10.125	Strainers and Connections.
24.10.130	Section 414.5 Amended; Limitation of Hot Water in Bathtubs and Whirlpool Bathtubs.
24.10.135	Section 418.0 Amended; Shower and Tub-Shower Combination Control Valves.
24.10.140	Table 4-1 Amended; Footnote 18 Added; Minimum Plumbing Facilities.
24.10.145	Section 510.0 Deleted; Venting of Appliances.
24.10.150	Section 511.0 Deleted; Sizing of Category I Venting Systems.
24.10.155	Section 603.4.6 Amended; Protection from Lawn Sprinklers and Irrigation Systems.
24.10.160	Section 603.4.16 Deleted; Protection from Fire Systems.
24.10.165	Table 6-4 Amended; Materials for Building Supply and Water Distribution Piping and Fittings.
24.10.170	Section 604.1 Amended; Materials.
24.10.175	Section 604.2 Amended; Copper Tube.

24.10.180	**Section 604.4 Deleted; Materials.**
24.10.185	**Section 604.12 Deleted; Flexible Corrugated Connectors.**
24.10.190	**Section 604.14 Deleted; Water Heater Connectors.**
24.10.195	**Section 605.5 Amended; Control Valve Installation.**
24.10.200	**Section 606.2.2 Deleted; Plastic Fittings.**
24.10.205	**Section 608.5 Amended: Use of Joints.**
24.10.210	**Section 609.1 Amended; Installation.**
24.10.215	**Section 609.2 Amended; Installation Testing, Unions, and Location.**
24.10.220	**Section 609.3.1 Deleted; Ferrous Piping.**
24.10.225	**Section 609.5 Deleted; Unions.**
24.10.230	**Section 609.6 Deleted; Location.**
24.10.235	**Section 609.7 Deleted; Use of Abutting Lots.**
24.10.240	**Section 609.10 Amended; Water Hammer.**
24.10.245	**Table 6-5 Amended; Water Supply Fixture Units.**
24.10.250	**Section 701.1 Amended; Drainage Systems; Materials.**
24.10.255	**Table 7-1 Amended; Materials for Drain, Waste, Vent Pipe and Fittings.**
24.10.260	**Section 701.2 Amended; Materials; Drainage Fittings.**
24.10.265	**Section 701.3 Amended; Lead.**
24.10.275	**Section 704.3 Amended; Fixture Connections.**
24.10.280	**Section 705.1.4 Deleted; Asbestos Cement Sewer Pipe Joints.**
24.10.285	**Section 712.1 Amended; Media.**
24.10.290	**Section 713.4 Amended; Sewers Required.**
24.10.295	**Section 719.6 Amended; Cleanouts.**
24.10.300	**Section 804.1 Amended; Indirect Waste Receptors.**
24.10.305	**Section 807.4 Deleted; Indirect Wastes; Appliances.**
24.10.310	**Section 810.2 Amended; Steam and Hot Water Drainage Condensers and Sumps.**
24.10.315	**Section 901.0 Amended; Vents Required.**
24.10.320	**Section 903.0 Amended; Vents; Materials.**
24.10.325	**Section 903.2.1 Amended; Use of Copper Tubing.**
24.10.330	**Section 904.1 Amended; Size of Vents.**
24.10.335	**Section 905.7 Added; Two-inch Minimum Vent.**
24.10.340	**Section 906.6 Amended; Vents; Lead.**
24.10.345	**Section 906.7 Amended; Frost or Snow Closure.**
24.10.350	**Section 908.2.1 Amended; Horizontal Wet Venting for Bathroom Groups.**
24.10.355	**Section 909.0 Amended; Special Venting for Island Fixtures.**
24.10.360	**Section 1001.3 Amended; Traps Required.**
24.10.365	**Section 1014.3.5 Amended; Construction Requirements.**
24.10.370	**Section 1101.3 Amended; Storm Drainage; Material Uses.**
24.10.375	**Sections 1101.5 through 1101.10 Deleted; Subsoil Drains.**
24.10.380	**Section 1102.1.2 Amended; Conductors.**
24.10.385	**Section 1102.2.2 Amended; Leaders.**
24.10.390	**Section 1102.5 Deleted; Subsoil Drains.**
24.10.395	**Section 1103.0 Deleted; Traps on Storm Drains and Leaders.**

24.10.400 **Section 1104.3 Deleted; Combining Storm with Sanitary Drainage.**
24.10.405 **Table 11-1 Amended; Sizing Roof Drains, Leaders, and Vertical Rainwater Piping.**
24.10.410 **Table 11-3 Deleted; Size of Gutters.**
24.10.415 **Section 1105.4.1 Amended; Roof Drain Flashings.**
24.10.420 **Section 1106.3 Deleted; Size of Roof Gutters.**
24.10.425 **Section 1106.4 Deleted; Side Walls Draining onto a Roof.**
24.10.430 **Chapters 12, 13 and 15 of the Uniform Plumbing Code Deleted.**
24.10.435 **Chapter 17 Added; Water Conditioning Installations and Contractors.**
24.10.440 **Chapter 18 Added; Excavations in Streets, Alleys, or Public Rights-of-Way.**
24.10.445 **Chapter 19 Added; Underground Irrigation System.**
24.10.450 **Chapter 20 Added; Hydronics.**
24.10.455 **Appendix D, Table D-1, State of Nebraska, Amended; Sizing Stormwater Drainage Systems.**
24.10.460 **Appendix E 9 Amended; M/H Lot Drainage Inlet and Lateral.**
24.10.465 **Appendix E 11 Amended; Pipe Size.**
24.10.470 **Appendix L 7.0 Added; Alternate Plumbing System Drawings.**

24.10.005 Adoption of 2009 Uniform Plumbing Code.

Except as hereinafter provided by specific amendment, the Uniform Plumbing Code, 2009 Edition, including Appendix: A, B, D, I, and L, sponsored by ASSE, NAPHCC, MCAA, UA and WFCA, is hereby adopted and incorporated into Title 24 of the Lincoln Municipal Code. The presence of these logos, while reflecting support, does not imply any ownership of the copyright to the UPC which is held exclusively by IAPMO. The ASSE "service mark and logo" on the cover of this document indicates ASSE's support of the voluntary, open consensus process being used by IAPMO and NFPA to develop their codes and standards. Three copies of this document shall be filed in the office of the Director of Building and Safety of the City of Lincoln for the use of and examination by the public. The City Clerk shall maintain one copy of this document in book form with the official records of the City. (Ord. 19658 §1; December 12, 2011).

24.10.010 Green Plumbing & Mechanical Code Supplement Added as Reference.

The 2010 Green Plumbing & Mechanical Code Supplement is hereby adopted as reference material to the Uniform Plumbing Code. (Ord. 19658 §2; December 12, 2011).

24.10.015 Section 101.0 Amended; Title, Purpose and Scope.

Section 101.0 of the Uniform Plumbing Code is amended to read as follows:

101.1 Title. This ordinance shall be known as the "Lincoln Plumbing Code," and may be cited as such and will be referred to herein as "this code."

101.2 Purpose. The purpose of this code is to provide minimum standards to safeguard individual life, limb, health, and property, and the public health, safety and welfare by regulating and controlling the design, quality of material, and installation, alteration, and repair of all plumbing

and drainage systems within the corporate limits of the City of Lincoln and within three miles thereof and outside the limits of any other incorporated city or village.

101.3 Scope. The provisions of this code shall apply to the installation, alteration, or repair of all plumbing and drainage systems including the practice, materials, and fixtures used in the installation and appurtenances thereto, except mains and septic systems, within the corporate limits of the City of Lincoln and within three miles thereof and outside the limits of any other incorporated city or village. Where, in any specific case, different sections of this code specify different materials, methods of installation or other requirements, the most restrictive shall govern.

101.3.1 Appendices. The provisions in the appendices are intended to supplement the requirements of this Code and shall not be considered part of this Code unless formally adopted.

101.4 Alternate Materials or Methods of Installation. The provisions of this code are not intended to prevent the use of any material or method of installation prescribed by this code, provided any such alternate has been approved by the Administrative Authority. The Administrative Authority may approve any such alternate, provided the authority finds that the proposed design is satisfactory and complies with the provisions of this code, and that the material, method, or work offered is, for the purpose intended, at least the equivalent of that prescribed in this code in quality, strength, effectiveness, durability, and safety. The Administrative Authority shall require that sufficient evidence or proof be submitted by a qualified testing laboratory to substantiate any claims that may be made regarding its use.

101.5 Existing Plumbing. All existing plumbing work coming within the scope of this code shall be subject to inspection by the Administrative Authority at the request of the agent, owner, or occupant of any building or premises where said plumbing work is located in order to ascertain whether or not said plumbing is in a safe and properly operating condition. Whenever defective or improperly operating plumbing is found, the Administrative Authority shall notify the owner of the premises on which same is found or his agent to correct the deficiency in such a manner as the Administrative Authority may authorize and direct. Such owner or agent shall, within ten days after receiving such notification to correct deficiencies, make the necessary corrections, and failure or neglect to do so shall constitute a violation of this ordinance and be subject to prosecution as provided by law. (Ord. 19658 §3; December 12, 2011).

24.10.020 Section 102.0 Amended; Organization and Enforcement.

Section 102.0 of the Uniform Plumbing Code is amended to read as follows:

102.0 Organization and Enforcement.

102.1 Administrative Authority. The Director of Building and Safety for the City of Lincoln is herein designated as the "Administrative Authority" and he shall be responsible for administration and enforcement of this code. The Administrative Authority may appoint such inspectors and other employees as shall be authorized from time to time. He may deputize and authorize such inspectors or employees as may be necessary to carry out his duties and responsibilities under this code.

102.2 Right of Entry. Whenever it shall be necessary to make an inspection to enforce any of the provisions of this code, or whenever the Administrative Authority or his authorized representative have reasonable cause to believe that there exists in any building upon any premises any plumbing or drainage systems, or portions thereof, that have become hazardous to life, limb, health, or property, or that work is being done or has been done in violation of this code, then the Administrative Authority or his authorized representative may enter such building or premises at

all reasonable times to inspect the same or perform any duty imposed upon the Administrative Authority by this code; provided that:

(1) If such building or premises be occupied, he shall first present proper credentials and request entry; and

(2) If such building or premises be unoccupied, he shall first make a reasonable effort to locate the owner or other persons having charge or control of the building or premises and request entry. If such entry is refused, the Administrative Authority shall have recourse to every remedy provided by law to secure entry.

102.3 Enforcement.

102.3.1 All plumbing and drainage systems coming within the scope of this code, including all water, sanitary sewer, and storm sewer mains on private property, shall be inspected by the Administrative Authority to assure compliance with all the requirements herein. Mains as herein defined shall be either water, sanitary sewer, or storm sewer, connecting two or more buildings, structures, or premises under single- or multi-ownership.

102.3.2 Private water mains two inches or larger, private sanitary sewer mains six inches or larger, and private storm sewer mains fifteen inches or larger shall be installed in accordance with the specifications and design standards established by the Administrative Authority. Mains smaller in size than listed above, located on private property, shall be installed in accordance with the Lincoln Plumbing Code, Table 1 and inspected by the Administrative Authority.

Table 1
Underground PVC Sanitary,
Storm Installations
Materials Inside & Outside of Buildings

Pipe Size	Type	Joints
2 in through 6 in	Schedule 40 Schedule 80 ASTM 2241 SDR 26 AWWA C-900 DR-14 ASTM-F405-2005	Solvent Weld Or Gasket
8 in through 12 in	All the above ASTM -3034 SDR 26	Solvent Weld Or Gasket
15 in or Larger	All of the above ASTM - F679 T-1[1] ASTM 3034 SDR- 35	Solvent Weld Or Gasket

[1] exterior storm water only with watertight joints

Bedding Requirements from invert to top of pipe

Inside of Building structure
All sizes --- 47B gravel or crushed limestone 3/4" crushed run or chips
Exterior of Building structure
2" thru 6" not required
8" and larger 47B gravel or crushed limestone 3/4" crushed run or chips

102.3.3 Water, sanitary sewer, or storm sewer systems must comply with the requirements of the Lincoln Plumbing Code for individual services as a condition of subdivision approval.

EXCEPTION: Mains installed on public right-of-way or dedicated public easements shall be exempt from the requirements of the Lincoln Plumbing Code, but shall comply with the design standards and specifications as administered by the Public Works and Utilities Department.(Ord. 19658 §4; December 12, 2011).

24.10.025 Section 103 Amended; Inspections and Tests.

Section 103.0 of the Uniform Plumbing Code is amended to read as follows:

103.0 Inspections and Tests.

103.1 It shall be the duty of the person installing, altering, or repairing plumbing or drainage systems authorized by a permit under this code to notify the Administrative Authority orally or in writing that said plumbing work is ready for inspection. Such notification shall be given not less than twenty-four hours before the plumbing or drainage work is ready for inspection. It shall be the duty of the permittee doing the work authorized by a permit to provide reasonable access and means for accomplishing proper inspection. In the event that the registered master plumber, identified under Lincoln Municipal Code 24.10.030 as authorized to take out a permit, is intending for the owner of the property to request a final inspection, said registered master plumber shall provide the owner of the property with information on requesting a city inspection. The owner of the property shall have the duty of requesting the final inspection and provide access and a means for proper inspection. For all inspections, the work to be inspected must properly withstand all tests prescribed and all equipment shall be operational before giving the above notification. If the Administrative Authority shall find that the work will not withstand the prescribed tests or is not operational, the permittee or owner shall be required to renotify the Administrative Authority as provided above and shall be subject to a reinspection fee charge.

103.2 No person shall cover or conceal from view any plumbing or drainage work in any building or premises so as to prevent a proper inspection thereof by the Administrative Authority. Whenever any plumbing or drainage work in any building or premises has been covered or concealed before the Administrative Authority has had an opportunity to inspect same, the Administrative Authority shall have authority to order the opening of such cover at the permittee's expense in order to make a proper inspection. No plumbing or drainage system shall be used or the water permanently turned on until such system has been finally inspected and approved by the Administrative Authority.

103.3 All rough and finish plumbing shall be tested with air or water as prescribed in this code. When it is necessary to cover a portion of the work before all of the rough plumbing is ready for inspection, the Administrative Authority must be notified and a test made by filling the same with water under a pressure that will be equal to the entire plumbing system when filled to the top of the highest vent pipe. If the groundwork is to be connected to the sewer, there shall be a suitable fitting left in the main soil pipe not more than one foot from where the soil pipe enters the building, so that a testing plug can be inserted. The Administrative Authority, upon approving the rough plumbing or drainage work, shall place thereon a notice stating that the same has been inspected and approved.

103.4 Stop Orders. Whenever any plumbing or drainage system is being installed, altered, or repaired contrary to the provisions of this code, the Administrative Authority shall order the work stopped by notice served on any person or persons engaged in the doing or causing such work to be done, and any such work shall forthwith stop until the administrative authority has authorized the work to proceed again.

The Administrative Authority shall investigate all cases reported or referred to him alleging the use of improper material or workmanship on any work involving installation, alteration, or repair of a plumbing or drainage system by any person and may stop such work in a manner as above described.

103.5 Reports and Records. The Administrative Authority shall keep a complete record of all inspections and tests made pursuant to the provisions of this code. An accurate accounting of fees and other monies collected and received under the provisions of this code shall be deposited with the City Treasurer.

103.6 Condemnation Procedures. Whenever defective or improperly operating plumbing equipment or work is found, the Administrative Authority shall condemn such equipment or work by notification to the master plumber contractor, owner of the premises, or agent thereof in writing noting the deficiencies and requiring correction thereof within not less than ten days after receiving such notification. Failure or neglect to correct deficiencies or make necessary corrections within the time designated by the Administrative Authority shall constitute a violation of this ordinance and shall be subject to prosecution as hereinafter provided. (Ord. 19658 §5; December 12, 2011).

24.10.030 Section 104.0 Added; Permit Required.

Section 104.0 is added to the Uniform Plumbing Code to read as follows:

104.0 Permit Required.

104.1 No person shall install, alter, or repair any plumbing or drainage work or cause the same to be done, without first obtaining a permit therefor from the Administrative Authority as hereinafter required; provided, no permit, license, or registration shall be required for minor repair work. Minor repair work as used in this section is defined as maintenance of the plumbing system, such as the repair of a damaged or leaking trap, water pipe, or drain pipe with approved materials; opening up and cleaning drain pipes; repairing and/or resetting of existing fixtures; or the replacement of faucets, faucet washers, float valves, ball stops, hoses, or sump pumps. The replacement and/or relocation of water pipes, drain pipes, vent pipes, fixtures, or the change in type or kind of fixture shall require a permit.

104.2 A permit shall be issued only to a properly registered master plumber contractor of the City of Lincoln; provided, a permit may be issued to the owner of a single-family dwelling to do plumbing or drainage work in such dwelling where the same is used exclusively for the purposes of such owner. Such plumbing or drainage work performed by an owner shall be performed by himself without compensation or pay to any other person therefor. Any owner doing plumbing or drainage work hereunder shall apply for the required permit, pay the prescribed fee therefor, call for inspections and do all work in accordance with the provisions of this code.

EXCEPTION: A utility contractor working in the public right-of-way or within dedicated public easements, under the authorization of the Department Public Works and Utilities or the authority of an executive order, shall be allowed to take out plumbing permits. Such permits shall be limited to the reconnection of the portion of existing building sewer services which lie within the public right-of-way or dedicated public easement, and will tap into the new parallel or replacement sewer main. Public Works and Utilities Administration providing inspection on such utility projects shall be responsible to ensure permits are taken out in accordance with the plumbing code, and the records for the new connections and taps, including accurate measurements providing size and location, are forwarded to the Department of Building and Safety in a timely manner.

104.3 Application for Permit. A plumbing permit may be obtained by filing a written application therefor on a form furnished by the Administrative Authority. Such form shall require

a description of the character of the work proposed to be done under the permit, the location, ownership, occupancy and use of the premises in connection therewith, and such other information as may reasonably be necessary to carry out the purpose of this code. All applications for a plumbing permit shall be signed by the applicant. The Administrative Authority may further require that two sets of plans and specifications or details be submitted with each application for a permit and that such plans and specifications or details be prepared, designed, and sealed by a licensed engineer or architect of the State of Nebraska. All plans and specifications shall include a schematic riser diagram and shall be of sufficient clarity to indicate the nature and extent of the work proposed, and shall show in detail that such work will conform to the provisions of this code and all relevant laws, ordinances, rules, and regulations.

104.3.1 Online Permit Application. A permit may be obtained online through the Administrative Authority's electronic permit application form. The Administrative Authority shall establish and maintain written procedures and requirements for issuing the master plumber contractor a unique personal identification number to be used in combination with an authenticated personal computer under the exclusive control of the master plumber contractor. The written procedures shall list the acceptable verification or authentication services, payment and use of which shall be the sole responsibility of the master plumber contractor. If a permit is applied for electronically, the applicant shall affix a signature by use of a digital or electronic signature that complies with the requirements of state law. The use of a digital or electronic signature shall have the same force and effect as the use of a manual signature and the master plumber contractor shall be responsible for all aspects of the proper use or misuse of either the electronic signature or the unique personal identification number.

104.4 Permits. The application for a plumbing permit together with the plans and specifications filed therewith shall be examined by the Administrative Authority and if he is satisfied that the work proposed conforms to the requirements of this code, he shall issue a permit to the applicant upon payment of the prescribed permit fee. Every permit issued by the Department of Building and Safety shall under these provisions expire by limitation and become null and void if the building or work authorized by such permit is not commenced within 120 days from the date of such permit , or if the building or work authorized by such permit is suspended or abandoned at any time after the work has commenced for a period of 180 days. Upon issuance of the permit, the Administrative Authority shall stamp one set of plans and specifications "approved" such work as approved shall not be changed, modified, or altered without authorization from the Administrative Authority.

104.5 Fees. A fee for each plumbing permit shall be paid to the Administrative Authority as follows:

Minimum Fee: $35.00 for one inspection; additional inspections are $35.00 each.

Any permit fee up to $350.00 includes up to five inspections; additional inspections are $35.00 each.

Permits over $350.00 include one inspection for each increment of $50.00; each additional inspection shall be $50.00.

All additional inspection fees must be paid prior to final permit or occupancy being issued.

SCHEDULE OF FEES[1]

Minimum permit fee charge	$35.00
For each plumbing fixture[2], or trap, or set of fixtures on one trap, including water, drainage piping and backflow protection therefor	8.00
For each water heater replacement and/or vent	8.00
For each indirect waste connection[3]	8.00
For each domestic water supply connection to any boiler	8.00
For change in location of plumbing fixture	8.00
For change in location or alteration of any existing water, building sewer, drainage or vent piping, inside a building	10.00
For each roof drain of a rainwater system	8.00
For each 100 lineal feet or fraction thereof of building sanitary sewer	
4 inches or less in diameter	25.00
Greater than 4 inches in diameter	50.00
For each 100 lineal feet or fraction thereof of building storm sewer	50.00
Man Holes	75.00
Reinspection fee (wrong address, plumbing work that does not pass inspection, work not complete, inaccessibility)	40.00
For each industrial waste pretreated interceptor, including its trap and vent, except kitchen-type grease interceptors functioning as plumbing fixture traps	10.00
For each automobile garage-type mud trap and sand trap or basin for car wash establishments	8.00
For each mobile home unit or trailer unit sanitary sewer riser connection to the mobile home court or trailer court sewer system	15.00
Decorative gas log	40.00

Each exhauster vacuum pump of an infrared iron pipe heating system 35.00

For each individual mobile home unit or trailer unit water service riser connection from the mobile home court or trailer court water distribution system 15.00

For each water tap on private water main 20.00

For each 100 lineal feet or fraction thereof of private water service

1 inch or less in diameter 25.00

Greater than 1 inch in diameter 50.00

For any storm sewer or sanitary sewer repair work outside of a building 10.00

For each fixture or piece of equipment regulated by this code but not listed herein (per unit) 8.00

[1] (Note: Water softener, lawn sprinkler system, swimming pools, and water-cooled air conditioning permit fees are covered elsewhere in this code.)

[2] (Note: A plumbing fixture shall be construed as any unit which has waste and/or water connections. A combination shower over a tub shall be construed as one plumbing fixture.)

[3] (Note: Applies to appliance device or apparatus not classed as a plumbing fixture but which has drip or drainage outlets.)

Boilers less than 200,000 btu 35.00

Fluid Cooler less than 20 ton 30.00

Each additional 10 ton 10.00

Heat pumps and FCU 25.00

Hydronic piping, Heating, Chilled, Condenser 10.00

Heat pump, Heat recovery piping 10.00

Radiant panel and Coil Piping 10.00

Where work for which a permit is required by this code is started prior to obtaining the prescribed permit, the fees above specified shall be doubled; provided, in the event of an emergency where it is absolutely necessary to perform the plumbing work immediately before a permit can be secured,

such as on nights, weekends, or holidays, said fee shall not be doubled if a permit is secured at the earliest possible time after the emergency plumbing work has been performed. The payment of such double fees shall not relieve any person from fully complying with the requirements of this code or from any penalties prescribed herein. There shall be no refunds or credits given on unused permits which have expired. Permit holders returning an unused permit prior to the expiration date of the permit shall be limited to a maximum refund amounting to two-thirds of the original fee, with the remaining one-third not to exceed $25.00 to be used to pay in part the cost of processing the permit. (Ord. 19658 §6; December 12, 2011).

24.10.035 Section 105.0 Added; Plumbing Board of Appeals.

Section 105.0 is added to the Uniform Plumbing Code to read as follows:

105.0 Plumbing Board of Appeals

105.1 Creation. In order to review determinations of the Administrative Authority as to the suitability of alternate materials and types of installation and in order to review interpretations of the provisions of this code by the Administrative Authority, there is hereby created and established a Plumbing Code Board of Appeals consisting of five members who shall be qualified by experience and training to pass upon matters pertaining to plumbing and drainage work. Two members shall be master plumber contractors registered with the City of Lincoln. The Administrative Authority shall be ex officio member and shall act as Secretary of this Board. The five members of the Appeals Board shall be appointed by the Mayor and shall hold office at his or her pleasure. The Board may adopt reasonable rules and regulations for the conduct of its investigations and shall render all decisions and findings in writing to the Administrative Authority with a duplicate copy to the person appealing to it.

105.2 Filing Fees. (a) Any person who is aggrieved by any decision, notice or order of the Administrative Authority relating to the suitability of alternate materials and types of installation and interpretation of any provision of this code may obtain review of such decision upon filing a written request for review by the Plumbing Code Board of Appeals in the office of the Administrative Authority within thirty days from the date of such decision and payment of a filing fee as provided below:

(1) A two hundred forty dollar ($240.00) fee for review of a decision of the Administrative Authority interpreting any provision or provisions of this code;

(2) A two hundred forty dollar ($240.00) fee for review of a decision of the Administrative Authority concerning the suitability of alternate materials or type of installation.

(b) The Administrative Authority shall refer all properly and timely filed appeals to the Plumbing Code Board of Appeals for hearing. The secretary of said board shall in each appeal notify the appellant in writing of the date, time, and place of hearing before the board, which date shall be no later than thirty days from the filing of the appeal. Such notice shall be served upon the appellant by personal service or certified mail.

(c) Hearings on appeal need not be conducted according to technical rules relating to evidence and witnesses. Oral evidence shall be taken only on oath or affirmation. Any relevant evidence shall be admitted if it is the type of evidence upon which responsible persons are accustomed to rely in the conduct of serious affairs, regardless of the existence of any common law or statutory rule which may make improper the admission of such evidence over objection in civil actions in courts of competent jurisdiction in this state. Irrelevant and unduly repetitious evidence shall be excluded. The appellant, the board members, the Administrative Authority, and any other party to an appeal hereunder shall have these rights, among others:

(1) To call and examine witnesses on any matter relevant to the issues of the hearing:

(2) To introduce documentary and physical evidence;

(3) To cross-examine opposing witnesses on any matter relevant to the issues of the hearing; and

(4) To rebut evidence.

(d) The Plumbing Code Board of Appeals shall then within a reasonable time after the hearing render a written decision which shall state its findings and conclusions. Decisions of the Plumbing Code Board of Appeals may be appealed as provided by law.

(e) Enforcement of any decision, notice, or order of the Administrative Authority issued under this code shall be stayed during the pendency of an appeal therefrom which is properly and timely filed, except in cases of emergency, where enforcement of the same is necessary for the protection of persons or property. (Ord. 19658 §7; December 12, 2011).

24.10.040 Section 106.0 Added; Examining Board of Plumbers.

Section 106.0 is added to the Uniform Plumbing Code to read as follows:

106.0 Examining Board of Plumbers.

106.1 Creation. There is hereby created and established an Examining Board for Plumbers which shall consist of five members and shall hereinafter be referred to as the "Examining Board." Members of the Examining Board shall consist of the Administrative Authority, a registered professional engineer who has passed the mechanical examination of the State of Nebraska, the Chief Plumbing Inspector of the City of Lincoln, and two master plumber contractors registered with the City of Lincoln. The plumbers and professional engineer shall be appointed by the Mayor with the concurrence of the City Council for staggered terms of three years each. Vacancies shall be filled by appointment for the unexpired term only. The Chief Plumbing Inspector shall be the Permanent Secretary of the Examining Board and shall keep a record of all meetings.

106.2 Authority. Unless authority is specifically delegated to other boards provided by this code, the Examining Board shall, subject to the approval of the Mayor, adopt rules and regulations consistent with the provisions of this code for the examination of applicants for registration under the provisions of this code. The Plumbing Code Board of Appeals shall review any written requests of an aggrieved party to the Administrative Authority. Decisions of the Plumbing Code Board of Appeals may be appealed as provided by law. The Examining Board shall determine minimum qualifications for applicants for registration and as part of the rules and regulations shall determine the nature of the examination to be given applicants for registration.

106.3 Meeting. The Examining Board shall meet on the Tuesday following the February, May, August, and November exams of each year. Special meetings may be held when deemed necessary at the call of the chairman.(Ord. 19658 §8; December 12, 2011).

24.10.045 Section 107.0 Added; Registration of Plumbers.

Section 107.0 is added to the Uniform Plumbing Code to read as follows:

107.0 Registration of Plumbers.

107.1 Classification. There shall be four classes of registrations as follows:

(1) Master plumber contractor is hereby defined to be any person skilled in the planning, superintending, and material installation of plumbing and drainage and gas piping, and who is familiar with the ordinances and regulations governing the same, and who is competent to install, repair, alter, or remove plumbing or drainage or gas piping with the full responsibility of supervision, whether doing such work by himself or employing journeyman plumbers and plumbing apprentices to assist him. A master plumber contractor y supervise a maximum of three apprentices at a job site address.

(2) Master plumber is hereby defined to be any person skilled in the planning, superintending, and material installation of plumbing and drainage and gas piping, and who is familiar with the ordinances and regulations governing the same, and who is competent to install, repair, alter, or remove plumbing or drainage or gas piping with the full responsibility of supervision, whether doing such work by himself or employing journeyman plumbers and plumbing apprentices to assist him. However, said master plumber cannot take out permits except as provided under Section 24.10.030, 104.2 for owner occupants. A master plumber may supervise a maximum of three apprentices at a job site address.

(3) Journeyman plumber is hereby defined to be any person employed by a master plumber, other than a plumber's apprentice, who as his principal occupation is engaged in the practical installation, alteration, repair, or removal of plumbing and drainage or gas piping. A journeyman plumber may supervise a maximum of three apprentices at a job site address.

(4) Plumber's apprentice is hereby defined to be a person, other than a master plumber or journeyman plumber, who as his principal occupation is engaged in learning and assisting in the installation, repair, alteration, or removal of plumbing and drainage or gas piping as an employee under the direct supervision and on the same job site of a master plumber or journeyman plumber. Applications for registration shall show compliance with state and federal labor laws.

107.2 No person shall engage in or hold himself out as engaging in the plumbing business in the city, or within three miles thereof, or install any piping, fixtures, or other apparatus for supplying water or install any plumbing fixtures, drainage, vents, and water distribution systems except as provided in Section 24.10.030 herein, or install any gas piping system, unless he shall have been duly authorized to do so by registration in one of the classifications above described; except that gas piping systems may also be installed by any person holding an appropriate registration under Chapter 24.05 or 25.04 of this Code.

The Administrative Authority with the approval of the Examining Board shall have sole power to grant certificates to those duly qualified to be registered. It shall be unlawful for any person to perform any plumbing or gas piping work not authorized by the registration certificates issued to him.

107.3 Application for Registration. Application for registration as a master plumber contractor, master plumber, journeyman plumber, or plumber's apprentice shall be made in writing to the Administrative Authority on a form furnished by him for such purpose. Such form shall require the name and address of the applicant, the business location of the applicant, a statement of the practical experience of the applicant, and such other relevant information as may be required by the Administrative Authority.

107.4 Examination for Registration.

107.4.1 Before any applicant shall be registered as a master plumber contractor, master plumber or journeyman plumber, he shall pay an examination fee and shall be required to submit to and pass a written examination to determine his qualifications and fitness for executing the class of work under this Code and the Lincoln Gas Piping Systems Code covered by the registration for which application is made. Such examination shall normally be given the third Thursday of February, May, August, and November under the direction of the Examining Board. The examination date may be changed by majority approval of the Examining Board and notification of the master plumbing contractors. Any applicant who fails to pass the required examination shall not be eligible to take another examination until at least six months shall have elapsed from the date of last examination.

107.4.2 Examination and Registration Fees. Each applicant for master plumber contractor, master plumber registration or journeyman plumber registration shall pay to the Administrative Authority an examination fee as follows:

Master plumber contractor and master plumber examination fee $100.00

Journeyman plumber examination fee $75.00

Upon initial issuance or subsequent renewal of a registration certificate, a registration fee shall be paid annually to the Administrative Authority as follows:

Master Plumber Contractor registration fee $250.00

Master plumber registration fee $50.00

Journeyman plumber registration fee $40.00

Plumber's apprentice registration fee $20.00

107.4.3 Exemption. Any person dealing in plumbing materials or supplies, but not engaged in the installation, alteration, repair, or removal of plumbing or drainage systems shall not be required to register hereunder.

Any person duly registered at the time of the adoption of this code shall be automatically registered under his appropriate classification of registration without submitting to an examination.

107.5 Registration of Corporation, Firm, or Partnership. Any corporation, firm, or partnership may be registered hereunder as a master plumber contractor in the name of such corporation, firm, or partnership, provided that such corporation, firm, or partnership must have a master plumber contractor as a bona fide employee or partner who has submitted to the examination given by the Examining Board of Plumbers and has thereby shown himself fit, competent and qualified to engage in the business, trade, or calling of a master plumber contractor, and who shall at all times be in actual charge of and responsible for all installation, removal, or repair of plumbing or drainage systems performed by such corporation, firm, or partnership. The registration certificate shall also be issued in the name of the employee or partner registered as a master plumber contractor. In the event the master plumber contractor employee or partner of a corporation, firm, or partnership possessing a certificate of registration shall withdraw therefrom and cease to be connected therewith, then and in such event he shall immediately notify the Administrative Authority, who shall forthwith recommend to the Examining Board that the certificate of registration of such corporation, firm, or partnership be revoked. A master plumber contractor working for and covered by the insurance of a corporation, firm, or partnership registered under this section is not required to duplicate such coverage under his own insurance policy.

107.6 Expiration and Renewal of Registration. Registrations shall expire on the thirty-first day of May following the date of issuance. Registration shall not be assignable.

In order to renew a Master plumber or Master plumber contractor certificate or registration issued by the Building and Safety Department of the City of Lincoln, proof of 6 hours of continuing education annually shall be required. The continuing education may consist of training programs, courses, and seminars approved by the Examining Board.

Certificates of registration for journeyman plumbers, at the time of their expiration, may be renewed upon recommendation of the Examining Board without an examination, upon payment of the required annual registration fee.

Certificates of registration for plumber's apprentice may be renewed upon payment of the required annual registration fee.

Any person registered under the provisions of this code as a master plumber contractor, master plumber or a journeyman plumber who does not renew his certificate of registration within a period of sixty days after the expiration of same shall pay the examination fee required by this code for a master plumber contractor, master plumber or a journeyman plumber, as the case may be, and shall submit himself to and pass the regularly scheduled examination given by the Examining Board before such person can be again registered hereunder.

No registered master plumber contractor, master plumber or journeyman plumber shall employ any person as a plumber's apprentice who is not registered as a plumber's apprentice within the City of Lincoln. No plumber's apprentice shall be permitted to work at the installation, alteration, repair, or removal of any plumbing or drainage except under the direct supervision and on the same job site of a duly registered master plumber contractor, master plumber or journeyman plumber.

107.7 Suspension or Revocation of Certificate of Registration. The Examining Board of Plumbers, after hearing as hereinafter specified and upon the recommendations of the Administrative Authority, shall have the power to suspend or revoke any master plumber contractor, master plumber or journeyman plumber certificate of registration if the same was obtained by error or fraud, or if the holder thereof is shown to be no longer qualified, or if such holder fails, neglects, or refuses to comply with the provisions of this code.

If suspension or revocation of a master plumber contractor, master plumber or journeyman plumber certificate of registration is recommended as above provided, the Examining Board shall cause written notice to be served upon the registered plumber whose registration is recommended for suspension or revocation, setting forth a time and place for a public hearing. Upon the conclusion of such hearing, the Examining Board shall within thirty days thereafter render a written decision to such registered plumber regarding suspension or revocation of his registration. Such written decision shall be served by mailing it to such registered plumber by certified mail at his last known business address or by personal service. If a certificate of registration is revoked, the holder of the same shall not apply for registration until one year after the date of such revocation. Decisions of the Examining Board concerning suspension or revocation of registration may be appealed as provided by law.

It shall be unlawful for any registered plumber to allow his name to be used by an other person, directly or indirectly, to obtain a permit for the installation, alteration, or repair of any plumbing or drainage system. Violation of this section shall be sufficient grounds for suspension or revocation of said certificates of registration as herein provided.

107.8 Identification of Contractors. All registered plumbing contractors shall display their registration number on all vehicles while they are engaged in the installation, repair, or replacement of plumbing equipment. The registration number, with at least two-inch numbers, shall be readily visible on each side of the vehicle. The registration number shall be included in all printed advertisements. (Ord. 19658 §9; December 12, 2011).

24.10.050 Section 108.0 Added; Certificate of Insurance.

Section 108.0 is added to the Uniform Plumbing Code to read as follows:

108.0 Certificate of Insurance.

108.1 Before any master plumber contractor as herein defined may be issued a permit under the provisions of this code, such master plumber contractor shall be required to:

(1) At all times maintain public liability insurance coverage for all claims arising out of all work in the City of Lincoln and within three miles of the corporate limits thereof done by or under the supervision of the master plumber under the provisions of this code. Such insurance shall be in the form of a commercial or comprehensive general liability policy, or an acceptable substitute policy form as permitted by the City Attorney, with a minimum combined single limit of $500,000.00 aggregate for any one occurrence on any job for which a permit is required under this code, provided the City of Lincoln shall be named an additional insured thereunder. The coverages required herein shall be subject to review and approval by the City Attorney for conformance with the provisions of this section.

(2) At all times keep on file with the Administrative Authority a current certificate of insurance signed by a qualified agent of an insurance company licensed to do business in the State of Nebraska and approved by the City Attorney for conformance with the provisions of this section evidencing the existence of valid and effective policies of insurance naming the city as an additional insured for the coverage required by subsection (1) of this section, the limits of each policy, the policy number, the name of the insurer, the effective date and expiration date of each policy, the deductibles or self-insurance retainers of each policy, and a copy of an endorsement placed on each policy requiring thirty days notice by mail to the Administrative Authority before the insurer may cancel the policy for any reason, and upon request of the Administrative Authority or the City Attorney, a copy of any endorsements placed on such policies or the declarations page of such policies.

Any termination, reduction, or lapse of such insurance shall automatically terminate the master plumber contractor's privilege to be issued permits under the provisions of this code, unless other insurance meeting the requirements of this section is provided and in full force and effect at the time of such expiration or cancellation.

108.2 Payment Bond. Before any master plumber contractor, as defined herein, may be issued a permit to make excavations in the public ways of the city, such master plumber contractor shall deposit with the Administrative Authority a $5,000.00 payment bond. Said bond shall provide that the master plumber contractor shall pay to the city the cost of refilling such excavation and replacing the surface thereof. Failure to keep payments for excavation backfills and resurfacing in accordance with Public Works and Utilities Department policy shall be grounds for withholding further permits of any kind until such backlog of charges are paid in full. (Ord. 19658 §10; December 12, 2011).

24.10.055 Section 109.0 Added; Sanitary Sewer Connection.

Section 109.0 is added to the Uniform Plumbing Code to read as follows:

109.0 Sanitary Sewer Connection.

109.1 Outside Corporate City Limits. In the event premises outside of the corporate limits of the city desire to be connected to the public sanitary sewer system, such connection shall be permitted only by executive order of the Mayor, and the charges for such connection shall be determined by the City Council.

109.2 Connection to Public Water or Sanitary Sewer System by Nonabutting Agreement. In the event the public water system or public sanitary sewer system is not available to a premises, then such premises may be permitted to connect to such public systems by specific request to the Director of Public Works and Utilities. A public water or sanitary sewer system shall be deemed available to a premises if such premises are within 300 feet, measured along a street, alley, or public utility easement.

109.3 Registered Master Plumber to Install Sewer to Tap. No person other than a registered master plumber contractor or his full-time employee registered as a plumber shall install the sanitary building sewer drain to its point of connection to the sanitary sewer main except as permitted in Section 24.10.030.

109.4 Sanitary Sewer Tap Permit. A sanitary sewer tap permit may be obtained by filing a written application therefor on a form furnished by the wastewater system. Such form shall require a description of the sanitary building sewer material, the location and ownership of the premises in connection therewith, the location and depth of the sanitary building sewer at its point of connection with the public sanitary sewer main, and such other information as may reasonably be required by the wastewater system. A sanitary sewer tap permit may be issued only to a properly registered master plumber contractor of the City of Lincoln. The registered master plumber contractor to whom the permit has been issued shall notify the wastewater system at least six hours in advance of the time the tap is to be made.

109.5 Making Tap. No person, except an employee of the wastewater system shall, under any circumstances, tap the public sanitary sewer mains, except by special authorization of the Director of Public Works and Utilities. The registered master plumber contractor shall be responsible to see that all necessary excavation shall be made and all dirt cleaned from around the sanitary sewer main sufficiently to permit the making of the tap. The registered master plumber contractor shall be responsible to see that shoring or bracing of the excavation is installed and shall not be backfilled until the tap is made by the wastewater system and the sanitary building sewer connection to the tap has been inspected and approved by the Plumbing Inspection Department in the Department of Building and Safety.

109.6 Tap Fees. The tap to be used in making the connection to the public sanitary sewer main shall be furnished by the wastewater system and the cost thereof, together with the installation cost, shall be paid by the registered master plumber contractor to the wastewater system at the time of issuance of the tap permit. (Ord. 19658 §11; December 12, 2011).

24.10.060 Section 212.0 Amended; Definitions - J.

Section 212.0 of the Uniform Plumbing Code is amended by adding the following definition for "job site":

Job Site – The Address for which the permit is issued. (Ord. 19658 §12; December 12, 2011).

24.10.065 Section 218.0 Amended; Definitions - P.

Section 218.0 of the Uniform Plumbing Code is amended by amending the definition of "plumbing system" and adding the definition of "premises" as follows:

Plumbing System -- Includes all potable water building supply and distribution pipes, all plumbing fixtures and traps, all drainage and vent pipe(s), and all building drains and building sewers, including all building drains and building sewers, including their respective joints and connection, devices, receptors, and appurtenances within the property lines of the premises and shall include potable water piping, potable water treating or using equipment, water heaters and vents for same.

Premises – A tract of land and the buildings upon it, consisting of one platted lot or irregular tract, or more than one platted lot or irregular tract and the buildings or part of a building upon it; provided, such lots are under common ownership and contiguous. (Ord. 19658 §13; December 12, 2011).

24.10.070 Section 220.0 Amended; Definitions - R.

Section 220.0 of the Uniform Plumbing Code is amended by adding the definition of "rain sensor" as follows:

Rain Sensor - An automatic device that can be set to turn off an underground irrigation system under predetermined rain or soil moisture conditions. (Ord. 19658 §14; December 12, 2011).

24.10.075 Section 224.0 Amended; Definitions - V.

Section 224.0 of the Uniform Plumbing Code is amended by adding the definition of "vent, loop" as follows:

Vent, Loop – A circuit which loops back to connect with a stack vent instead of a vent stack. (Ord. 19658 §15; December 12, 2011).

24.10.080 Section 311.1 Amended; Drainage Fitting.

Section 311.1 of the Uniform Plumbing Code is amended to read as follows:

311.1 Drainage fitting. No double hub fitting, single or double tee branch, single or double tapped tee branch, running thread, band, or saddle shall be used as a drainage fitting, except that a double hub sanitary tee with single or double side inlet may be used on a vertical line as a fixture connection. (Ord. 19658 §16; December 12, 2011).

24.10.085 Section 311.3 Deleted; Waste Connection.

Section 311.3 of the Uniform Plumbing Code is hereby deleted. (Ord. 19658 §17; December 12, 2011).

24.10.090 Section 311.4 Deleted; Vent Pipe.

Section 311.4 of the Uniform Plumbing Code is hereby deleted. (Ord. 19658 §18; December 12, 2011).

24.10.095 Section 311.8 Amended; Screwed Fittings.

Section 311.8 of the Uniform Plumbing Code is amended to read as follows:

311.8 Screwed Fittings. Screwed fittings shall be cast iron, copper, copper alloy, malleable iron, PVC, steel, or other approved materials. Threads shall be tapped out of solid metal or molded in solid or PVC. (Ord. 19658 §19; December 12, 2011).

24.10.100 Section 312.1 Added; Structures Considered as One Building.

Section 312.1 is added to the Uniform Plumbing Code to read as follows:

312.1 Structures Considered as One Building. Any structure having common exterior walls and roof and designed and approved by the Administrative Authority to be owned and used by separate owners may be considered as one building for the purposes of Section 312.0 above; provided, that an agreement, approved by the City Attorney as meeting the requirements of this section, binding upon all present and future owners of the structure has been recorded in the office of the Lancaster County Register of Deeds granting to all owners of the structure or portion thereof easement and access rights for the construction, maintenance, repair, and replacement of the common sanitary building drain and sanitary building sewer elements of such structure; and further, providing as among the owners of the structure for the responsibility for and the payment of all expense of such construction, maintenance, repair and replacement of such common sanitary building drain and sanitary building sewer. Before the issuance of a plumbing permit for any plumbing for such structure or portion thereof, the agreement shall be executed and approved and

shall be recorded by owners at their expense with the Lancaster County Register of Deeds. (Ord. 19658 §20; December 12, 2011).

24.10.105 Section 315.4 Amended; Trenching, Excavation, and Backfill.

Section 315.4 of the Uniform Plumbing Code is amended to read as follows:

315.4 All excavations shall be completely backfilled as soon after inspection as practicable. Adequate precaution shall be taken to insure proper compactness of backfill around piping without damage to such piping. Trenches shall be backfilled with clean earth which shall not contain stones, boulders, cinderfill, frozen earth, construction debris or other materials which would damage or break the piping or cause corrosive action. Mechanical devices such as bulldozers, graders, etc., may then be used to complete backfill to grade. Fill shall be properly compacted. Suitable precautions shall be taken to insure permanent stability for pipe laid in filled or made ground. (Ord. 19658 §21; December 12, 2011).

24.10.110 Section 401.2 Amended; Lead.

Section 401.2 of the Uniform Plumbing Code is amended to read as follows:

401.2 Lead. See Table 14-1. Sheet lead shall be not less than the following:
For safe pans – not less than 2 1/2 pounds per square foot or 1/16 inch thick. (Ord. 19658 §22; December 12, 2011).

24.10.115 Section 402.3.1 Deleted; Nonwater Urinals.

Section 402.3.1 of the Uniform Plumbing Code is hereby deleted. (Ord. 19658 §23; December 12, 2011).

24.10.120 Section 405.2 Exception Deleted; Prohibited Urinals.

The exception in Section 405.2 of the Uniform Plumbing Code is hereby deleted. (Ord. 19658 §24; December 12, 2011).

24.10.125 Strainers and Connections.

Approved wye or other directional type branch fittings shall be installed in all continuous wastes connecting or receiving the discharge from food waste disposal units, dishwashers, clothes washers, or other force discharge fixtures or appliances. (Ord. 19658 §25; December 12, 2011).

24.10.130 Section 414.5 Amended; Limitation of Hot Water in Bathtubs and Whirlpool Bathtubs.

Section 414.5 of the Uniform Plumbing Code is amended to read as follows:

414.5 Limitation of Hot Water in Bathtubs and Whirlpool Bathtubs. The maximum hot water temperature discharging from the bathtub and whirlpool bathtub filler shall be limited to 120° F by a device that conforms to ASSE 1070 or CSA B125.3. The water heater thermostat shall not be considered a control for meeting this provision. This does not apply to single family dwellings. (Ord. 19658 §26; December 12, 2011).

24.10.135 Section 418.0 Amended; Shower and Tub-Shower Combination Control Valves.

Section 418.0 of the Uniform Plumbing Code is amended to read as follows:

418.0 Shower and Tub-Shower Combination Control Valves. Showers and tub-shower combinations in buildings shall be provided with individual control valves of the pressure balance, thermostatic, or combination pressure balance/thermostatic mixing valve type that provide scalds

and thermal shock protection. These valves shall conform to ASSE 1016 or ASME A112.18.1/CSA B125.1. Gang showers, when supplied with a single temperature-controlled water supply pipe, shall be controlled by a mixing valve that conforms to ASSE 1069. Handle position stops shall be provided on such valves and shall be adjusted per the manufacturer's instructions to deliver a maximum mixed water setting of 120°F. The water heater thermostat shall not be considered a suitable control for meeting this provision. This does not apply to single family dwellings. (Ord. 19658 §27; December 12, 2011).

24.10.140 Table 4-1 Amended; Footnote 18 Added; Minimum Plumbing Facilities.

Footnote 18 is added to Table 4-1 of the Uniform Plumbing Code to read as follows:

[18] Occupancies of 25 or less need only one mens and one womens lavatory and water closet.

(Ord. 19658 §28; December 12, 2011).

24.10.145 Section 510.0 Deleted; Venting of Appliances.

Section 510.0 of the Uniform Plumbing Code and all subsections, figures and tables related thereto are hereby deleted. (Ord. 19658 §29; December 12, 2011).

24.10.150 Section 511.0 Deleted; Sizing of Category I Venting Systems.

Section 511.0 of the Uniform Plumbing Code and all subsections, figures and tables related thereto are hereby deleted. (Ord. 19658 §30; December 12, 2011).

24.10.155 Section 603.4.6 Amended; Protection from Lawn Sprinklers and Irrigation Systems.

Section 603.4.6 of the Uniform Plumbing Code is amended to read as follows:

603.4.6 Protection from Lawn Sprinklers and Irrigation Systems.

603.4.6.1 Application for Permit. Application shall be made to the Administrative Authority for a permit for the installation of any underground irrigation system. All such applications when required by the Administrative Authority shall be accompanied by plans and specifications in duplicate and in sufficient detail to show clearly the underground supply piping, pipe sizes, depth of pipes below ground surface, location of valves, backflow preventer devices, adjacent curbs, sidewalks, property lines, and such other data as may be pertinent to the installation. Said plans shall show in particular all piping that is proposed to be located in the public right-of-way, and such piping may be permitted, provided, however, that such permission and the issuance of a permit for the installation of an underground irrigation system wholly or partly in the public right-of-way shall be granted as a privilege. Said plans shall further show in detail the location of the water meter in relation to the water service and the location at which the underground irrigation system is connected to the water service pipe, and a diagram locating all heads, valves, shutoffs, drains, and distribution pipes.

603.4.6.2 Potable water supplies to systems having no pumps or connections for pumping equipment, and no chemical injection or provisions for chemical injection, shall be protected from backflow by one of the following devices:

1. Atmospheric vacuum breaker
2. Pressure vacuum breaker
3. Reduced pressure backflow preventor

603.4.6.3 Where sprinkler and irrigation systems have pumps, connections for pumping equipment, auxiliary air tanks or are otherwise capable of creating back-pressure, the potable water supply shall be protected by the following type of device if the backflow device is located upstream from the source of back-pressure.

1. Reduced pressure backflow preventor

603.4.6.4 Where systems have a backflow device installed downstream from a potable water supply pump or a potable water supply pump connection, the device shall be one of the following:

1. Atmospheric vacuum breaker
2. Pressure vacuum breaker
3. Reduced pressure backflow preventor

603.4.6.5 Where systems include a chemical injector or any provisions for chemical injection, the potable water supply shall be protected by the following:

1. Reduced pressure backflow preventor.

(Ord. 19658 §31; December 12, 2011).

24.10.160 Section 603.4.16 Deleted; Protection from Fire Systems.

Section 603.4.16 of the Uniform Plumbing Code and all subsections thereof are hereby deleted. (Ord. 19658 §32; December 12, 2011).

24.10.165 Table 6-4 Amended; Materials for Building Supply and Water Distribution Piping and Fittings.

Table 6-4 of the Uniform Plumbing Code is amended to read as follows:

[See Table 6-4 on the following page]

TABLE 6-4
Materials for Building Supply and Water Distribution Piping and Fittings

Material	Building Supply Pipe and Fittings	Water Distribution Pipe and Fittings	Referenced Standard(s) Pipe	Referenced Standard(s) Fittings
Brass	X	X	ASTM B43, ASTM B135	
Copper	X	X	ASTM B42, ASTM B75, ASTM B88, ASTM B251, ASTM B302, ASTM B447	ASME B16.15, ASME B16.18, ASME B16.22, ASME B16.26
Ductile-Iron	X	X	AWWA C151	ASME B16.4, AWWA C110, AWWA C153
Galvanized Steel	X	X	ASTM A53	
Malleable Iron	X	X		ASME B16.3
PE (Outside Only)	X[1]		ASTM D2239, ASTM D2737, ASTMD3035, AWWA C901, CSA B137.1	ASTM D2609, ASTM D2683, ASTM D3261, ASTM F1055, CSA B137.1
PE-AL-PE	X	X	ASTM F1282, CSA B137.9	ASTM F1282, ASTM F1974, CSA B137.9
PEX	X	X	ASTM F87 , ASTM F877, CSA B137.5	ASTM F877, ASTM F1807, ASTM F1960, ASTM F1961, ASTM F2080, ASTM F2159, CSA B137.5
PEX-AL-PEX	X	X	ASTM F1281, CSA B137.10, ASTM F2262	ASTM F1281, ASTM F1974, ASTM F2434, CSA B137.10
PVC (Outside Only)	X[1]		AWWA C900	AWWA C-110
Stainless Steel	X	X	ASTM A269, ASTM A312	

[1] For Building Supply or cold-water applications.

(Ord. 19658 §33; December 12, 2011).

24.10.170 Section 604.1 Amended; Materials.

Section 604.1 of the Uniform Plumbing Code is amended to read as follows:

604.1 Water distribution pipe, building supply water pipe and fittings shall be of brass, copper, cast iron, galvanized malleable iron, galvanized wrought iron, galvanized steel, or other approved materials. PEX water pipe manufactured to recognized standards may be used for cold water distribution systems outside a building. PEX water pipe, tubing, and fittings, manufactured to recognized standards may be used for hot and cold water distribution systems within a building. All materials used in the water supply system, except valves and similar devices shall be of a like material, except where otherwise approved by the Administrative Authority. (Ord. 19658 §34; December 12, 2011).

24.10.175 Section 604.2 Amended; Copper Tube.

Section 604.2 of the Uniform Plumbing Code is amended to read as follows:

604.2 Copper tube for water piping shall have a weight of not less than Type L.

EXCEPTION: Type M copper tubing may be used for water piping when piping is above ground in, or on, a building. (Ord. 19658 §35; December 12, 2011).

24.10.180 Section 604.4 Deleted; Materials.

Section 604.4 of the Uniform Plumbing Code is hereby deleted. (Ord. 19658 §36; December 12, 2011).

24.10.185 Section 604.12 Deleted; Flexible Corrugated Connectors.

Section 604.12 of the Uniform Plumbing Code is hereby deleted. (Ord. 19658 §37; December 12, 2011).

24.10.190 Section 604.14 Deleted; Water Heater Connectors.

Section 604.14 of the Uniform Plumbing Code is hereby deleted. (Ord. 19658 §38; December 12, 2011).

24.10.195 Section 605.5 Amended; Control Valve Installation.

Section 605.5 of the Uniform Plumbing Code is amended to read as follows:

605.5 A control valve shall be installed immediately ahead of each water-supplied appliance and immediately ahead of each slip joint or appliance supply. (Ord. 19658 §39; December 12, 2011).

24.10.200 Section 606.2.2 Deleted; Plastic Fittings.

Section 606.2.2 of the Uniform Plumbing Code is hereby deleted. (Ord. 19658 §40; December 12, 2011).

24.10.205 Section 608.5 Amended: Use of Joints.

Section 608.5 of the Uniform Plumbing Code is amended to read as follows:

608.5 Use of Joints. Relief valves located inside a building shall be provided with a drain, not smaller than the relief valve outlet, of galvanized steel, hard drawn copper piping and fittings, or listed relief valve drain tube with fittings which will not reduce the internal bore of the pipe or tubing (straight lengths as opposed to coils) and shall extend from the valve to the outside of the building with the end of the pipe not more than two (2) feet nor less than six (6) inches above the ground or the flood level of the area receiving the discharge and pointing downward. Such drains may terminate at other approved locations. No part of such drain pipe shall be trapped or subject to

freezing. The terminal end of the drain pipe shall not be threaded. (Ord. 19658 §41; December 12, 2011).

24.10.210 Section 609.1 Amended; Installation.

Section 609.1 of the Uniform Plumbing Code is amended to read as follows:

609.1 Installation. All water piping shall be adequately supported to the satisfaction of the Administrative Authority. Burred ends shall be reamed to the full bore of the pipe or tube. Changes in direction shall be made by the appropriate use of fittings, except that changes in direction in copper tubing may be made with bends, provided that such bends are made with bending equipment which does not deform or create a loss in the cross-sectional area of the tubing. Changes in direction are allowed with flexible pipe and tubing without fittings in accordance with the manufacturer's installation instructions. Provisions shall be made for expansion in hot water piping. All piping, equipment, appurtenances, and devices shall be installed in a workman-like manner in conformity with the provisions and intent of the Code. All water service yard piping shall be at least twelve (12) inches below the average local frost depth. (Ord. 19658 §42; December 12, 2011).

24.10.215 Section 609.2 Amended; Installation Testing, Unions, and Location.

Section 609.2 of the Uniform Plumbing Code is amended to read as follows:

609.2 Installation Testing, Unions, and Location. Water pipes shall not be run or laid in the same trench as building sewer or drainage piping unless both of the following conditions are met:

609.2.1 The bottom of the water pipe, at all points, shall be at least twelve (12) inches above the top of the sewer or drain line.

609.2.2 The water pipe shall be placed on a solid shelf excavated at one side of the common trench with a minimum clear horizontal distance of at least twelve (12) inches from the sewer or drain line. Water pipes crossing sewer or drainage piping shall maintain a 12-inch separation. (Ord. 19658 §43; December 12, 2011).

24.10.220 Section 609.3.1 Deleted; Ferrous Piping.

Section 609.3.1 of the Uniform Plumbing Code is hereby deleted. (Ord. 19658 §44; December 12, 2011).

24.10.225 Section 609.5 Deleted; Unions.

Section 609.5 of the Uniform Plumbing Code is hereby deleted. (Ord. 19658 §45; December 12, 2011).

24.10.230 Section 609.6 Deleted; Location.

Section 609.6 of the Uniform Plumbing Code is hereby deleted. (Ord. 19658 §46; December 12, 2011).

24.10.235 Section 609.7 Deleted; Use of Abutting Lots.

Section 609.7 of the Uniform Plumbing Code and all subsections thereof are hereby deleted. (Ord. 19658 §47; December 12, 2011).

24.10.240 Section 609.10 Amended; Water Hammer.

Section 609.10 Of the Uniform Plumbing Code is amended to read as follows:

609.10 Water Hammer. All building water supply systems in which quick-acting valves are installed shall be provided with devices to absorb the hammer caused by high pressures resulting from the quick closing of these valves. These pressure-absorbing devices shall be either air chambers or approved mechanical devices. Water pressure absorbing devices shall be installed as close as possible to quick-acting valves.

EXCEPTION: Shall not be required in residential installations. (Ord. 19658 48; December 12, 2011).

24.10.245 Table 6-5 Amended; Water Supply Fixture Units.

Table 6-5 of the Uniform Plumbing Code is amended to read as follows:

[See Table 6-5 on following page]

TABLE 6-5
Water Supply Fixture Units (WSFU) and Minimum Fixture Branch Pipe Sizes [3]
1/2 inch = 15 mm
3/4 inch = 20 mm
1 inch = 25 mm

	Minimum Fixture Branch Pipe Size [1,3]	Private	Public	Assembly [5]
Appliances, Appurtenances or Fixtures [2]				
Bathtub or Combination Bath/Shower (fill)	1/2"	4.0	4.0	
3/4" Bathtub Fill Valve	3/4"	10.0	10.0	
Bidet	1/2"	1.0		
Clothes washer.	1/2"	4.0	4.0	
Dental Unit, cuspidor	1/2"	1.0		
Dishwasher, domestic	1/2"	1.5	1.5	
Drinking Fountain or Water cooler	1/2"	0.5	0.5	0.75
Hose Bibb	1/2"	2.5	2.5	
Hose Bibb, each additional [7]	1/2"		1.0	1.0
Lavatory.	1/2"		1.0	1.0 1.0
Mobile Home, each (minimum)		12.0		
Sinks				
Bar	1/2"	1.0	2.0	
Clinic Faucet	1/2"	3.0		
Clinic Flushometer Valve with or without faucet	1"	8.0		
Kitchen, domestic	1/2"	1.5	1.5	
Laundry	1/2"	1.5	1.5	
Service or Mop Basin	1/2"	1.5	3.0	
Washup, each set of faucets	1/2"	2.0		
Shower, per head	1/2"	2.0	2.0	
Urinal, 1.0 GPF Flushometer Valve	3/4"	See Footnote 6		
Urinal, greater than 1.0 GPF Flushometer Valve	See Footnote 6			
Urinal, flush tank	1/2"	2.0	2.0	3.0
Wash fountain, circular spray	3/4"	4.0		
Water Closet, 1.6 GPF Gravity Tank	1/2"	2.5	2.5	3.5
Water Closet, 1.6 GPF Flushometer Tank	1/2"	2.5	2.5	3.5
Water Closet, 1.6 GPF Flushometer Valve	1"	See Footnote 6		
Water Closet, greater than 1.6 GPF Gravity Tank	1/2"	3.0	5.5	7.0
Water Closet, greater than 1.6 GPF Flushometer Valve	1"	See Footnote 6		

Notes:

1. Size of the cold branch pipe, or both the hot and cold branch pipes.
2. Appliances, Appurtenances or Fixtures not included in this Table may be sized by reference to fixtures having a similar flow rate and frequency of use.
3. The listed minimum supply branch pipe sizes for individual fixtures are the nominal (I.D.) pipe size.
4. For fixtures or supply connections likely to impose continuous flow demands, determine the required flow in gallons per minute (GPM) and add it separately to the demand (in GPM) for the distribution system or portions thereof.
5. Assembly [Public Use (See Table 4-1)].
6. When sizing flushometer systems see Section 610.10.
7. Reduced fixture unit loading for additional hose bibbs as used is to be used only when sizing total building demand and for pipe sizing when more than one hose bibb is supplied by a segment of water distributing pipe. The fixture branch to each hose bibb shall be sized on the basis of 2.5 fixture units.

(Ord. 19658 §49; December 12, 2011).

24.10.250 Section 701.1 Amended; Drainage Systems; Materials.

Section 701.1 of the Uniform Plumbing Code is amended to read as follows:

701.1 Drainage piping shall be cast iron, galvanized steel, galvanized wrought iron, lead, copper, brass, Schedule 40 PVC DWV, extra strength vitrified clay pipe, or other approved materials having a smooth and uniform bore, except that:

701.1.1 No galvanized wrought iron or galvanized steel pipe shall be used underground and shall be kept at least six (6) inches above ground.

701.1.2 PVC DWV piping installations shall be installed in accordance with IS 5, IS 9 and Chapter 15 "Firestop Protection for DWV and Stormwater Application". Except for individual single family dwelling units, materials exposed within ducts or plenums shall have a flame-spread index of not more then 25 and a smoke-developed index of not more than 50, when tested in accordance with the Test for Surface -Burning Characteristics of the Building Materials (See the Building Code standards based on ASTM E-84 and ANSI/UL 723.).

701.1.3 No vitrified clay pipe or fittings shall be used above ground or where pressurized by a pump or ejector. They shall be kept at least twelve (12) inches below ground.

701.1.4 Copper tube for drainage and vent piping shall have a weight of not less than that of copper drainage tube type DWV.

EXCEPTION: Type L shall be required underground. (Ord. 19658 §50; December 12, 2011).

24.10.255 Table 7-1 Amended; Materials for Drain, Waste, Vent Pipe and Fittings.

Table 7-1 of the Uniform Plumbing Code as it relates to Section 701.1 of the Uniform Plumbing Code is amended to read as follows:

Table 7-1
Materials for Drain, Waste, Vent Pipe and Fittings

Material	Underground Drain, Waste, Vent Pipe and Fittings	Above ground Drain, Waste, Vent Pipe and Fittings	Building Sewer Pipe and Fittings	Referenced Standard(s) Pipe	Referenced Standard(s) Fittings
Brass		X		ASTM B43	
Cast-Iron	X	X	X	ASTM A74, ASTM A888, CISPI 301	ASME B16.12, ASTM A74, ASTM A888, CISPI 301
Copper (Type DWV)	X	X	X	ASTM B75, ASTM B251, ASTM B302, ASTM B306	ASME B16.23, ASME B16.29
Galvanized Malleable Iron		X			ASME B16.3
Galvanized Steel		X		ASTM A53	
PVC (Schedule 40)	X	X	X	ASTM D1785, ASTM D2665, ASTM F794[1]	ASTM D2665, ASTM F794[1], ASTM F1866
Stainless Steel 304		X		ASME A112.3.1	ASME A112.3.1
Stainless Steel 316L	X	X	X	ASME A112.3.1	ASME A112.3.1
Vitrified Clay (Extra strength)			X	ASTM C700	ASTM C700

[1] For Building Sewer Applications

(Ord. 19658 §51; December 12, 2011).

24.10.260 Section 701.2 Amended; Materials; Drainage Fittings.

Section 701.2 of the Uniform Plumbing Code is amended to read as follows:

701.2 Drainage fittings shall be of cast iron, malleable iron, lead, brass, copper, PVC, vitrified clay, or other approved materials having a smooth interior waterway of the same diameter as the piping served and all such fittings shall be compatible with the type of pipe used. (Ord. 19658 §52; December 12, 2011).

24.10.265 Section 701.3 Amended; Lead.

Section 701.3 of the Uniform Plumbing Code is amended to read as follows:

701.3 Lead. See Table 14-1. Sheet lead shall be not less than the following:

For safe pans – not less than 2 1/2 pounds per square foot or 1/16 inch thick. For flashings or vent terminals – not less than 2 1/2 pounds per square foot or 1.2 mm thick. Lead bends and lead

traps shall not be less than one-eighth (1/8) inch wall thickness. (Ord. 19658 §53; December 12, 2011).

24.10.270 Section 703.1 Amended; Building Drain (Minimum Size).

Section 703.1 of the Uniform Plumbing Code is amended to read as follows:

703.1 Building Drain (Minimum Size). Building drains serving a single structure shall be a minimum of four inches to the first three-inch or larger stack.

EXCEPTION: Where the sewer comes in above the basement floor or where the house drain runs above the ground, in which case each four-inch sewer shall have one four-inch cleanout at the basement wall and may be reduced to three inch at that point. (Ord. 19658 §54; December 12, 2011).

24.10.275 Section 704.3 Amended; Fixture Connections.

Section 704.3 of the Uniform Plumbing Code is amended to read as follows:

704.3 Pot sinks, scullery sinks, dishwashing sinks, silverware sinks, commercial dishwashing machines, silverware-washing machines, and other similar fixtures may be connected directly to the drainage system. A floor drain shall be provided adjacent to the fixture, and the fixture shall be connected on the sewer side of the floor drain trap, provided that no other drainage line is connected between the floor drain waste connection and the fixture drain. The fixture and floor drain shall be trapped and vented as required by this Code.

EXCEPTION: Each unit shall discharge through an approved air gap fitting and be separately trapped or discharge indirectly into a properly trapped and vented fixture. (Ord. 19658 §55; December 12, 2011).

24.10.280 Section 705.1.4 Deleted; Asbestos Cement Sewer Pipe Joints.

Section 705.1.4 of the Uniform Plumbing Code is hereby deleted. (Ord. 19658 §56; December 12, 2011).

24.10.285 Section 712.1 Amended; Media.

Section 712.1 of the Uniform Plumbing Code is amended to read as follows:

712.1 The piping of the plumbing, drainage, and venting systems shall be tested with water or air. The Authority Having Jurisdiction shall be permitted to require the removal of any cleanouts, etc., to ascertain whether the pressure has reached all parts of the system. After the plumbing fixtures have been set and their traps filled with water, they shall be submitted to a final test. (Ord. 19658 57; December 12, 2011).

24.10.290 Section 713.4 Amended; Sewers Required.

Section 713.4 of the Uniform Plumbing Code is amended to read as follows:

713.4 The public sewer may be considered as not being available when such public sewer or any building or any exterior drainage facility connected thereto, is located more than three hundred (300) feet from any proposed building or exterior drainage facility on any lot or premises which abuts and is served by such public sewer. (Ord. 19658 §58; December 12, 2011).

24.10.295 Section 719.6 Amended; Cleanouts.

Section 719.6 of the Uniform Plumbing Code is amended to read as follows:

719.6 Approved manholes may be installed in lieu of clean outs when first approved by the Administrative Authority. The maximum distance between manholes shall not exceed three hundred (300) feet. (Ord. 19658 §59; December 12, 2011).

24.10.300 Section 804.1 Amended; Indirect Waste Receptors.

Section 804.1 of the Uniform Plumbing Code is amended to read as follows:

804.1 All plumbing fixtures or other receptors receiving the discharge of indirect waste pipes shall be approved for the use proposed and shall be of such shape and capacity as to prevent splashing or flooding and shall be located where they are readily accessible for inspection and cleaning. No standpipe receptor for any clothes washer shall extend more than forty-two (42) inches, nor less than eighteen (18) inches above its trap. No indirect waste receptor shall be installed in any toilet room, closet, cupboard, or storeroom, nor in any other portion of a building not in general use by the occupants thereof; except stand pipes for clothes washers may be installed in toilet and bathroom areas when the clothes washer is installed in the same room. (Ord. 19658 §60; December 12, 2011).

24.10.305 Section 807.4 Deleted; Indirect Wastes; Appliances.

Section 807.4 of the Uniform Plumbing Code is hereby deleted. (Ord. 19658 §61; December 12, 2011).

24.10.310 Section 810.2 Amended; Steam and Hot Water Drainage Condensers and Sumps.

Section 810.2 of the Uniform Plumbing Code is amended to read as follows:

810.2 Sumps, condensers, or intercepting tanks which are constructed of concrete shall have walls and bottom not less than four (4) inches in thickness, and the inside shall be cement plastered not less than one-half (1/2) inch in thickness. Condensers constructed of metal shall be not less than No. 12 U.S. Standard gauge (0.109 inch) and all such metal condensers shall be protected from external corrosion by an approved bituminous coating.

EXCEPTION: Type 3 or greater RCP shall be approved. (Ord. 19658 62; December 12, 2011).

24.10.315 Section 901.0 Amended; Vents Required.

Section 901 of the Uniform Plumbing Code is amended to read as follows:

901.0 Vents Required. Each plumbing fixture trap, except as otherwise provided in this Code, shall be protected against siphonage and back-pressure, and air circulation shall be assured throughout all parts of the drainage system by means of vent pipes installed in accordance with the requirements of this chapter and as otherwise required by this Code.

EXCEPTION: Permitted Floor Drains. Two floor drains and one automatic washer drain or one floor drain, one shower drain, and one automatic washer drain may be installed unvented in a building and /or residential unit, provided that the branch is connected at least four feet from the base of any soil stack and all fixtures are located in the building drain fixture level. (Ord. 19658 §63; December 12, 2011).

24.10.320 Section 903.0 Amended; Vents; Materials.

Section 903.0 of the Uniform Plumbing Code is amended to read as follows:

903.0 Materials.

903.1 Vent pipe shall be cast iron, galvanized steel, galvanized wrought iron, copper, brass, Schedule 40 PVC DWV or other approved materials having a smooth and uniform bore except that:

903.1.1 No galvanized wrought iron or galvanized steel pipe shall be used underground and shall be kept at least six (6) inches above ground.

903.1.2 PVC DWV piping installations shall be installed in accordance with IS 5, IS 9 and Chapter 15 "Firestop Protection for DWV and Storm water Application". Except for individual single family dwelling units, materials exposed within ducts or plenums shall have a flame-spread index of not more then 25 and a smoke-developed index of not more than 50, when tested in accordance with the Test for Surface -Burning Characteristics of the Building Materials (See the Building Code standards based on ASTM E-84 and ANSI/UL 723.). (Ord. 19658 64; December 12, 2011).

24.10.325 Section 903.2.1 Amended; Use of Copper Tubing.

Section 903.2.1 of the Uniform Plumbing Code is amended to read as follows:

903.2.1 Copper tube for underground drainage and vent piping shall have a weight of not less than that of copper drainage tube type L. (Ord. 19658 65; December 12, 2011).

24.10.330 Section 904.1 Amended; Size of Vents.

Section 904.1 of the Uniform Plumbing Code is amended to read as follows:

904.1 The size of vent piping shall be determined from its length and the total number of fixture units connected thereto, as set forth in Table 7-5. The diameter of an individual vent shall not be less than one and one-fourth (1-1/4) inches nor less than one-half (1/2) the diameter of the drain to which it is connected. In addition, the drainage piping of each building and each connection to a public sewer or a private sewage disposal system shall be vented by means of one or more vent pipes, the aggregate cross-sectional area of which shall not be less than that of the largest required building sewer, as determined from Table 7-5.

EXCEPTION: Minimum Size of Stack Vent or Vent Stack. Any structure in which a building drain is installed shall have at least one stack vent or vent stack not less than three inches in diameter. (Ord. 19658 §66; December 12, 2011).

24.10.335 Section 905.7 Added; Two-inch Minimum Vent.

Section 905.7 is added to the Uniform Plumbing Code to read as follows:

905.7 Two-inch Minimum Vent. Any sanitary drainage system which has a house drain low enough to install fixtures on the lower level shall have two inch (minimum) vent extended below the first floor level where it shall be connected back into the drainage system. (Ord. 19658 §67; December 12, 2011).

24.10.340 Section 906.6 Amended; Vents; Lead.

Section 906.6 of the Uniform Plumbing Code is amended to read as follows:

906.6 See Table 14-1. Sheet lead shall be not less than the following:

For safe pans – not less than 2 1/2 pounds per square foot or 1/16 inch thick.

For flashings or vent terminals – not less than 2 1/2 pounds per square foot or 1.2 mm thick.

Lead bends and lead traps shall not be less than one-eighth (1/8) inch wall thickness. (Ord. 19658 §68; December 12, 2011).

24.10.345 Section 906.7 Amended; Frost or Snow Closure.

Section 906.7 of the Uniform Plumbing Code is amended to read as follows:

906.7 Frost or Snow Closure. Where frost or snow closure is likely to occur in locations having minimum design temperature below 0°F vent terminals shall be a minimum of three (3) inches in diameter but in no event smaller than the required vent pipe. The change in diameter shall be made inside the building at least one (1) foot below the roof in an insulated space and terminate not less than ten (10) inches above the roof, or as required by the Administrative Authority. (Ord. 19658 §69; December 12, 2011).

24.10.350 Section 908.2.1 Amended; Horizontal Wet Venting for Bathroom Groups.

Section 908.2.1 of the Uniform Plumbing Code is amended to read as follows:

908.2.1 Where Permitted. Water closets, bathtubs, showers and floor drains within one (1) or two (2) bathroom groups located on the same floor level shall be permitted to be vented by a wet vent. The wet vent shall be considered the vent for the fixtures and shall extend from the connection of the dry vent along the direction of the flow in the drain pipe to the most downstream fixture drain or trap arm connection to the horizontal branch drain. Each wet-vented fixture drain or trap arm shall connect independently to the wet-vented horizontal branch drain. Each individual fixture drain or trap arm shall connect horizontally to the wet-vented horizontal branch drain or shall be provided with a dry vent. The trap to vent distance shall be in accordance with Table 10-1. Only the fixtures within the bathroom groups shall connect to the wet-vented horizontal branch drain. The water closet fixture drain or trap arm connection to the wet vent shall be downstream of any fixture drain or trap arm connections. Any additional fixtures shall discharge downstream of the wet vent system and be conventionally vented. (Ord. 19658 §70; December 12, 2011).

24.10.355 Section 909.0 Amended; Special Venting for Island Fixtures.

Section 909.0 of the Uniform Plumbing Code is amended to read as follows:

909.0 Special Venting for Island Fixtures. Traps for island sinks and similar equipment shall be roughed in above the floor and may be vented by extending the vent as high as possible, but not less than the drainboard height and then returning it downward and connecting it to the horizontal sink drain immediately downstream from the vertical fixture drain. The return vent shall be connected to the horizontal drain through a wye-branch fitting and shall, in addition, be provided with a foot vent taken off the vertical fixture vent by means of a wye-branch immediately below the floor and extending to the nearest partition and then through the roof to the open air or may be connected to other vents at a point not less than six (6) inches above the flood level rim of the fixtures served. Drainage fittings shall be used on all parts of the vent below the floor level and a minimum slope of one-quarter (1/4) inch per foot back to the drain shall be maintained. The return bend used under the drainboard shall be a one (1) piece fitting or an assembly of a forty-five (45) degree a ninety (90) degree and a forty-five (45) degree elbow in the order named. Pipe sizing shall be as elsewhere required in this Code. The island sink drain, upstream of the returned vent, shall serve no other fixtures. An accessible cleanout shall be installed in the vertical portion of the foot vent. or connection between the outlet of a plumbing fixture and the trap therefor. Such tailpieces or connections shall be as short as possible, and in no case shall exceed two (2) feet.

EXCEPTION: The foot vent may be eliminated if pipe is one pipe size larger than required. (Ord. 19658 §71; December 12, 2011).

24.10.360 Section 1001.3 Amended; Traps Required.

Section 1001.3 of the Uniform Plumbing Code is amended to read as follows:

1001.3 No food waste disposal unit shall be installed with any set of restaurant, commercial, or industrial sinks served by a single trap; each such food waste disposal unit shall be connected to a separate trap. Each domestic clothes washer and each laundry tub shall be connected to a separate and independent trap; except that a trap serving a laundry tub may also receive the waste from a clothes washer set adjacent thereto. No clothes washer or laundry tub shall be connected to any trap for a kitchen sink. Connection of laundry tray waste line in a single dwelling unit may be made into the stand-pipe for the automatic clothes washer drain. (Ord. 19658 §72; December 12, 2011).

24.10.365 Section 1014.3.5 Amended; Construction Requirements.

Section 1014.3.5 of the Uniform Plumbing Code is amended to read as follows:

1014.3.5 Construction Requirements

1014.3.5.1 Purpose. Gravity grease interceptors shall be designed to remove grease from effluent and shall be sized in accordance with this section. Gravity grease interceptors shall also be designed to retain grease until accumulations can be removed by pumping the interceptor. It is recommended that a sample box be located at the outlet end of all gravity grease interceptors so that the Authority Having Jurisdiction can periodically sample effluent quality. A two-way clean out on inlet and outlet of each exterior grease interceptor shall be required. (Ord. 19658 §73; December 12, 2011).

24.10.370 Section 1101.3 Amended; Storm Drainage; Material Uses.

Section 1101.3 of the Uniform Plumbing Code is amended to read as follows:

1101.3 Rainwater piping placed within the interior of a building or run within a vent or shaft shall be of cast iron, galvanized steel, wrought iron, brass, copper, lead, Schedule 40 PVC DWV, or other approved materials, and changes in direction shall conform to the requirements of Section 706.0. and PVC DWV piping installations shall be installed in accordance with IS 5, IS 9 and Chapter 15 "Fire stop Protection for DWV and Storm water Application". Except for individual single family dwelling units, materials exposed within ducts or plenums shall have a flame-spread index of not more then 25 and a smoke-developed index of not more than 50, when tested in accordance with the Test for Surface -Burning Characteristics of the Building Materials (See the Building Code standards based on ASTM E-84 and ANSI/UL 723). (Ord. 19658 §74; December 12, 2011).

24.10.375 Sections 1101.5 through 1101.10 Deleted; Subsoil Drains.

Sections 1101.5 through 1101.10 of the Uniform Plumbing Code are hereby deleted. (Ord. 19658 §75; December 12, 2011).

24.10.380 Section 1102.1.2 Amended; Conductors.

Section 1102.1.2 of the Uniform Plumbing Code is amended to read as follows:

1102.1.2 The inside of conductors installed above ground level shall be of seamless copper water tube, Type K, L or M; Schedule 40 copper pipe or Schedule 40 copper alloy pipe; Type DWV copper drainage tube; service weight cast iron soil pipe or hubless cast iron soil pipe; standard weight galvanized steel pipe; or Schedule 40 PVC plastic pipe. (Ord. 19658 §76; December 12, 2011).

24.10.385 Section 1102.2.2 Amended; Leaders.

Section 1102.2.2 of the Uniform Plumbing Code is amended to read as follows:

1102.2.2 Leaders shall be of seamless copper water tube, Type K, L or M; Schedule 40 copper pipe; Schedule 40 copper alloy pipe; type DWV copper drainage tube; service weight cast iron soil pipe or hubless cast iron soil pipe; aluminum sheet metal, galvanized steel sheet metal or copper sheet metal; standard weight galvanized steel pipe; or Schedule 40 PVC plastic pipe. (Ord. 19658 §77; December 12, 2011).

24.10.390 Section 1102.5 Deleted; Subsoil Drains.

Section 1102.5 of the Uniform Plumbing Code and all subsections thereof are hereby deleted. (Ord. 19658 §78; December 12, 2011).

24.10.395 Section 1103.0 Deleted; Traps on Storm Drains and Leaders.

Section 1103.0 of the Uniform Plumbing Code and all subsections thereof are hereby deleted. (Ord. 19658 §79; December 12, 2011).

24.10.400 Section 1104.3 Deleted; Combining Storm with Sanitary Drainage.

Section 1104.3 of the Uniform Plumbing Code is hereby deleted. (Ord. 19658 §80; December 12, 2011).

24.10.405 Table 11-1 Amended; Sizing Roof Drains, Leaders, and Vertical Rainwater Piping.

Table 11-1 of the Uniform Plumbing Code is amended to read as follows:

TABLE 11-1
Sizing Roof Drains, Leaders, and Vertical Rainwater Piping

Size of Drain, Leader or Pipe, Inches	Flow, gpm	Maximum Allowable Horizontal Projected Roof Areas Square Feet at Various Rainfall Rates
		6"/hr
2	23	363
3	67	1073
4	144	2307
5	261	4187
6	424	6800
8	913	14,667

TABLE 11-1 (Metric)
Sizing Roof Drains, Leaders, and Vertical Rainwater Piping

Size of Drain Leader or Pipe, mm	Flow, L/s	Maximum Allowable Horizontal Projected Roof Areas Square Meters at Various Rainfall Rates
		150mm/hr
50	1.5	34
80	4.2	100
100	9.1	214
125	16.5	389
150	26.8	632
200	57.6	1363

Notes:

1. The sizing data for vertical conductors, leaders, and drains is based on the pipes flowing 7/24 full.
2. For rainfall rates other than those listed, determine the allowable roof area by dividing the area given in the 1 inch/hour (25 mm/hour) column by the desired rainfall rate.
3. Vertical piping may be round, square, or rectangular. Square pipe shall be sized to enclose its equivalent round pipe. Rectangular pipe shall have at least the same cross-sectional area as its equivalent round pipe, except that the ratio of its side dimensions shall not exceed 3 to 1.

(Ord. 19658 §81; December 12, 2011).

24.10.410 Table 11-3 Deleted; Size of Gutters.

Table 11-3 of the Uniform Plumbing Code is hereby deleted. (Ord. 19658 §82; December 12, 2011).

24.10.415 Section 1105.4.1 Amended; Roof Drain Flashings.

Section 1105.4.1 of the Uniform Plumbing Code is amended to read as follows:

1105.4.1 Where lead flashing material is used, it shall be a minimum of 2 1/2 pounds per square foot. (Ord. 19658 §83; December 12, 2011).

24.10.420 Section 1106.3 Deleted; Size of Roof Gutters.

Section 1106.3 of the Uniform Plumbing Code is hereby deleted. (Ord. 19658 §84; December 12, 2011).

24.10.425 Section 1106.4 Deleted; Side Walls Draining onto a Roof.

Section 1106.4 of the Uniform Plumbing Code is hereby deleted. (Ord. 19658 §85; December 12, 2011).

24.10.430 Chapters 12, 13 and 15 of the Uniform Plumbing Code Deleted.

Chapters 12, 13 and 15 of the Uniform Plumbing Code are hereby deleted. (Ord. 19658 §86; December 12, 2011).

24.10.435 Chapter 17 Added; Water Conditioning Installations and Contractors.

The Uniform Plumbing Code is amended by adding a new Chapter 17 to read as follows:

CHAPTER 17
WATER CONDITIONING INSTALLATIONS AND CONTRACTORS

1701.0 General Provisions. The provisions of this chapter shall control the design and installation, alteration, removal, or repair of water conditioning equipment, the registration of water conditioning contractors, and the issuance of permits and collection of fees therefor.

1702.0 Definitions. For the purpose of this chapter, the following definitions shall apply:

(1) Water conditioning appliance shall mean apparatus and equipment connected to a water supply other than by hose connections to existing faucets and designed to soften or filter or change the mineral content of water.

(2) Water conditioning installation shall mean only work incidental to the complete installation, repair, replacement, relocation, or removal of water conditioning appliances, including piping to hot and cold water lines for such purposes.

1703.0 Permits and Fees.

1703.1 It shall be unlawful for any person to install, alter, remove, or repair any water conditioning appliance, or cause the same to be done, without first obtaining a permit therefor

from the Administrative Authority. No permit shall be required for minor repair work. Minor repair work is defined as repairing leaks in pipes, cleaning out supply or waste lines, or repairing a water conditioning appliance.

1703.2 A permit to install a water conditioning appliance may be issued only to a duly registered water conditioning contractor or registered master plumber contractor or homeowner complying with Section 24.10.030. It shall be unlawful for any person, firm, or corporation to cause or permit any water conditioning installation to be done on any property owned, managed, or controlled by such person, firm, or corporation unless such work is done by said duly registered water conditioning contractor or registered master plumber contractor.

1703.3 Application for a permit may be made in writing to the Administrative Authority on a form furnished by the Administrative Authority for that purpose.

A fee shall be paid to the Administrative Authority as follows:

For each water conditioning installation $10.00

Reinspection fee (wrong address, work
that does not pass inspection, work
not complete, inaccessibility) $25.00

1703.3.1 A permit may be obtained online through the Administrative Authority's electronic permit application form. The Administrative Authority shall establish and maintain written procedures and requirements for issuing the master plumber contractor or water conditioning contractor a unique personal identification number to be used in combination with an authenticated personal computer under the exclusive control of the master plumber contractor or water conditioning contractor. The written procedures shall list the acceptable verification or authentication services, payment and use of which shall be the sole responsibility of the master plumber contractor or water conditioning contractor. If a permit is applied for electronically, the applicant shall affix a signature by use of a digital or electronic signature that complies with the requirements of state law. The use of a digital or electronic signature shall have the same force and effect as the use of a manual signature and the master plumber contractor or water conditioning contractor shall be responsible for all aspects of the proper use or misuse of either the electronic signature or the unique personal identification number.

1703.4 Water shall not be turned on to any water conditioning appliance until it has been inspected and approved by the Administrative Authority.

1704.0 Installation and Inspection.

1704.1 Installation and Inspection. The water piping to any water conditioning appliance shall be of materials and methods of installation approved for water distribution in this code. Piping from any water conditioning appliance to the city sewer system shall be of any material approved by the Administrative Authority.

1704.2 All water conditioning installations shall be inspected by the Administrative Authority to ensure compliance with all the requirements of this code. It shall be the duty of the person doing the work authorized by the permit to notify the Administrative Authority orally or in writing that said work is ready for inspection, and for said person doing the work to provide access and means for proper inspection. It shall be the duty of the person doing the work to call for inspection of the water conditioning installation not later than three days after the completion of the installation.

1705.0 Water Conditioning Board of Examiners.

1705.1 Creation. There is hereby created a Water Conditioning Board of Examiners (hereinafter referred to as the "Examining Board") which shall consist of one water conditioning contractor and four members of the Examining Board for Plumbers as follows: The Administrative Authority, a registered professional engineer, a registered master plumber contractor and the chief plumbing inspector. Said professional engineer and master plumber contractor shall serve on the Water Conditioning Board of Examiners concurrently with their terms on the Examining Board for Plumbers. The water conditioning contractor shall be appointed by the Mayor with the concurrence of the City Council for a term of three years to run concurrently with the term of the professional engineer member. Vacancies shall be filled by appointment for the unexpired term only. The Chief Plumbing Inspector shall be the Permanent Secretary of the Examining Board and shall keep a record of all meetings. The water conditioning contractor member of the Examining Board shall be associated with a business devoted solely to water conditioning appliance installations.

1705.2 The Examining Board shall have authority to adopt such rules and regulations as are consistent with the provisions of this code, subject to approval of the Mayor, for the examination of applicants for registration under the terms of this code. All decisions of the Examining Board shall be subject to review by the Mayor upon written request by an aggrieved party to the Mayor. The Examining Board shall determine the character of the examination to be given applicants for registration and shall elect annually a chairman who shall preside at all meetings.

1705.3 The Examining Board shall meet concurrently with the Examining Board of Plumbers.

1706.0 Registration of Water Conditioning Contractors and Installers.

1706.1 All persons installing water conditioning appliances shall be registered as water conditioning contractors or shall be registered as water conditioning installers. All water conditioning installers must be employed by a registered water conditioning contractor.

1706.2 Application for registration as a water conditioning contractor or water conditioning installer shall be made to the Administrative Authority on a form furnished by him for such purpose. Such form shall require the name and address of the applicant, the business location of the applicant, a statement of the practical experience of the applicant, and such other relevant information as may be required by the Administrative Authority.

1706.3 Any corporation may be registered as a water conditioning contractor in the name of such corporation; provided, such corporation shall have a registered water conditioning contractor as a bona fide officer or employee of such corporation and who shall at all times be in actual charge of water conditioning work done by such corporation. The registration certificate shall also be issued in the name of the person registered as a water conditioning contractor. In the event such water conditioning contractor shall sever his relationship with such corporation as a bona fide officer or employee, he must immediately notify the Administrative Authority, who shall forthwith recommend to the Examining Board that the certificate of registration of such corporation be revoked. It shall be unlawful for any corporation to act, engage in, advertise, or to otherwise represent itself as a water conditioning contractor in the City of Lincoln unless a bona fide officer or employee of such corporation is duly registered as a water conditioning contractor as provided in this chapter.

1706.4 Any firm or partnership may be registered as a water conditioning contractor in the name of such firm or partnership, provided such firm or partnership shall have a registered water conditioning contractor as a bona fide employee or partner of such firm or partnership and who shall at all times be in actual charge of the water conditioning work done by such firm or

partnership. The registration certificate shall also be issued in the name of the person registered as the water conditioning contractor. In the event such water conditioning contractor shall sever his relationship with such firm or partnership as a bona fide employee or partner, he must immediately notify the Administrative Authority and the Examining Board who shall forthwith recommend to the Mayor that the certificate of registration of such firm or partnership be revoked. It shall be unlawful for any firm or partnership to act, engage in, advertise or otherwise represent themselves as a water conditioning contractor in the City of Lincoln, unless a bona fide member or employee of such firm or partnership is duly registered as a water conditioning contractor as provided in this chapter.

1706.5 Application for registration as a water conditioning installer may be made to the Administrative Authority. Before a registration certificate shall be issued, the applicant shall be required to submit to and pass a written examination to determine his qualifications and fitness for executing the class of work covered by the registration. Such examination shall be given under the direction of the Examining Board. Any applicant who fails to pass the required examination shall not be eligible to take another examination until at least six months shall have elapsed from the date of last examination.

1707.0 Examination and Registration Fees.

1707.1 Each applicant for a new registration shall pay to the Administrative Authority an examination fee of $30.00.

Upon initial issuance or subsequent renewal of a registration certificate, annual registration fees shall be paid as follows:

Water conditioning contractor registration fee $50.00
Water conditioning installer registration fee $20.00

1707.2 All registrations provided by this section shall expire on the thirty-first day of May following the date of issuance thereof, and shall not be assignable. Any person registered under the provisions of this code as a Water conditioning contractor or installer who does not renew his certificate of registration within a period of sixty days after the expiration of same shall pay the examination fee required by this code for a water conditioner or a water conditioning installer, as the case may be, and shall submit himself to and pass the regularly scheduled examination given by the Examining Board before such person can be again registered hereunder.

1707.3 Any person registered under the provisions of this code as a water conditioning contractor or a water conditioning installer who does not renew his certificate of registration within a period of sixty days after the expiration of same shall pay the examination fee required by this code and shall submit himself to and pass the regularly scheduled written examination given by the Examining Board before such person can be again registered hereunder.

1707.4 All registered water conditioning contractors or installers duly registered at the time of the adoption of this code shall be automatically registered in their appropriate classification without submitting to an examination.

1708.0 Certificate of Insurance. Before any water conditioning contractor may be issued a permit or registered under the provisions of this chapter, such contractor shall have a regularly established place of business, and shall be required to:

(1) At all times maintain public liability insurance coverage for all claims arising out of all work in the City of Lincoln and within three miles of the corporate limits thereof done by or under the supervision of the water conditioning contractor under the provisions of this code. Such insurance shall be in the form of a commercial or comprehensive general liability policy, or an acceptable substitute policy form as permitted by the City Attorney, with a minimum combined

single limit of $500,000.00 aggregate for any one occurrence on any job for which a permit is required under this code, provided the City of Lincoln shall be named an additional insured thereunder. The coverages required herein shall be subject to review and approval by the City Attorney for conformance with the provisions of this section.

(2) At all times keep on file with the Administrative Authority a current certificate of insurance signed by a qualified agent of an insurance company licensed to do business in the State of Nebraska and approved by the City Attorney for conformance with the provisions of this section evidencing the existence of valid and effective policies of insurance naming the city as an additional insured for the coverage required by subsection (1) of this section, the limits of each policy, the policy number, the name of the insurer, the effective date and expiration date of each policy, the deductibles or self-insurance retainers of each policy, and a copy of an endorsement placed on each policy requiring thirty days notice by mail to the Administrative Authority before the insurer may cancel the policy for any reason, and upon request of the Administrative Authority or the City Attorney, a copy of any endorsements placed on such policies or the declarations page of such policies. Any termination, reduction, or lapse of such insurance shall automatically terminate the privilege of the water conditioning contractor to be issued permits under the provisions of this code, unless other insurance meeting the requirements of this section is provided and in full force and effect at the time of such termination or cancellation.

1709.0 Suspension or Revocation of Registration.

1709.1 The Mayor, upon the recommendation of the Administrative Authority and after a report of the Examining Board and hearing as hereinafter provided, may revoke any registration of a water conditioning contractor if the same was obtained by error or fraud, or if the holder thereof is shown to be no longer qualified, or if such holder fails, neglects, or refuses to comply with the provisions of this chapter.

1709.2 If suspension or revocation of a water conditioning certificate of registration is recommended and the Examining Board has submitted a written report affirming such recommendation, the Mayor shall cause written notice to be served upon the water conditioning contractor or installer whose registration is recommended for suspension or revocation, setting forth a time and place for a public hearing. Upon the conclusion of such hearing, the Mayor shall, within thirty days thereafter, render a written decision to such water conditioning contractor or installer regarding suspension or revocation of his registration. Such written decision shall be served by mailing it to such water conditioning contractor by certified mail at his last known business address or by personal service. If a certificate of registration is revoked, the holder of the same shall not apply for a registration until one year after the date of such revocation. Decisions of the Mayor concerning suspension or revocation of registration may be appealed as provided by law.

1709.3 It shall be unlawful for any registered water conditioning contractor to allow his name to be used by another person, directly or indirectly, to obtain a permit for the installation, alteration, or repair of any water conditioning equipment. Violation of the foregoing provision shall be sufficient grounds for suspension or revocation of the registration provided in this chapter. (Ord. 19658 §87; December 12, 2011).

24.10.440 Chapter 18 Added; Excavations in Streets, Alleys, or Public Rights-of-Way.

The Uniform Plumbing Code is amended by adding a new Chapter 18 to read as follows:

CHAPTER 18
EXCAVATIONS IN STREETS, ALLEYS, OR PUBLIC RIGHTS-OF-WAY

1801.0 Permit to Excavate. It shall be unlawful for any person, firm, or corporation, other than duly authorized employees of the City of Lincoln, to make any opening, cut, trench, or excavation in or under the surface of any street, alley, sidewalk, highway, or public property of the City of Lincoln without first obtaining a written permit to do so from the Department of Building and Safety of the City of Lincoln.

1802.0 Excavations, Lights, and Barricades.

1802.1 All trenches and excavations in the public way shall be excavated in such a manner as to impede public travel as little as possible. No excavations shall be made within two feet of any public sewer or water main by means of a mechanical digging machine. Gutter crossings and all other ways shall be kept in such condition at all times that water will readily escape and drain from the premises. Plank walkways of sufficient width and strength to provide safe passageway for pedestrians shall be provided where sidewalks or crossings are removed or interrupted, and over all trenches and excavations.

1802.2 Lighted flares or lights adequate in number shall be placed and maintained around all unfinished work between the hours of sunset and sunrise, and sufficient barricades against accidents shall be placed around excavations by the permittee at all times.

1803.0 Refilling Excavations.

1803.1 The opening and refilling of all cuts, trenches, and excavations in the public way shall be done under the direction and control of the Director of Public Works and Utilities. All excavations shall be adequately refilled with material acceptable to the Director of Public Works and Utilities and in such a manner that settling will not occur. Refilling shall not be done with cinders, broken concrete, or other debris, nor with frozen earth, nor when the material already in the excavation is frozen, nor when the walls of the trench or excavation are frozen. All refills shall be firmly compacted by mechanical tampers.

1803.2 All cuts, trenches, or excavations in, through, or under pavement or sidewalks, or any gravel or crushed stone road surface shall be filled and the pavement or surface replaced by the city, and the city shall assume and be responsible for maintaining such replaced surface. All other cuts, trenches, or excavations shall be refilled by the permittee making same, who shall be liable for any damage resulting from settling which occurs within two years after the refill is made.

1803.3 The placing of pipes through bore holes made with augers or boring machines under pavement, sidewalk, gravel, or crushed stone road surfaces shall be subject to the direction and control of the Director of Public Works and Utilities.

1804.0 Restoration of Surface. The permittee, upon completion of the excavation and refilling, shall remove all material, excess dirt, and debris and the parking area and sidewalk space shall be leveled and raked smooth. All sod which has been removed or damaged by reason of such excavation and refill shall be replaced or resodded with new sod, and any newly seeded areas shall be properly reseeded. Care shall be exercised throughout all operations to avoid damage to trees or shrubbery in the street space and adjacent areas, and permittee shall be liable for any damage that may occur to such trees and shrubbery, and at the option of the city or the adjoining property owner shall replace the damaged trees or shrubbery or pay such damages. Gravel or crushed stone roadways, driveways, or areas damaged or destroyed shall be restored with like material.

1805.0 Refilling Excavations; Private Property. The permittee shall be responsible for refilling and firmly compacting the sewer and water excavations so there will be no settling for two years. (Ord. 19658 §88; December 12, 2011).

24.10.445 Chapter 19 Added; Underground Irrigation System.

The Uniform Plumbing Code is amended by adding a new Chapter 19 to read as follows:

CHAPTER 19
UNDERGROUND IRRIGATION SYSTEM

1901.0 General Provisions. The provisions of this chapter shall control the design and installation of all underground irrigation systems. Irrigation system shall mean a permanently installed watering system, either manual or automatic, used for the watering of lawn turf, gardens, flowers, and similar types of plantings.

1902.0 Irrigation System Contractor; Definition. Irrigation system contractor shall mean anyone engaging in the installation of an irrigation system at a location other than their own personal residence.

1903.0 Permit Required. It shall be unlawful for any person to construct or install any underground irrigation system without first having obtained permits therefor as hereinafter required. Any person who shall construct or install an underground irrigation system without first having obtained the required permits shall pay permit fees which are twice the amount of the applicable fees hereinafter prescribed, and such person shall not in any way be relieved from complying with all of the provisions of law applicable to the construction and installation of underground irrigation systems.

1904.0 Application for Permit. Application shall be made to the Administrative Authority for a permit for the installation of any underground irrigation system. All such applications when required by the Administrative Authority shall be accompanied by plans and specifications in duplicate and in sufficient detail to show clearly the underground supply piping, pipe sizes, depth of pipes below ground surface, location of valves, backflow preventer devices, adjacent curbs, sidewalks, property lines, and such other data as may be pertinent to the installation. Said plans shall show in particular all piping that is proposed to be located in the public right-of-way, and such piping may be permitted, provided, however, that such permission and the issuance of a permit for the installation of an underground irrigation system wholly or partly in the public right-of-way shall be granted as a privilege. Said plans shall further show in detail the location of the water meter in relation to the water service and the location at which the underground irrigation system is connected to the water service pipe, and a diagram locating all heads, valves, shut offs, drains, and distribution pipes.

1905.0 Permit to Install Water Supply Piping from Water System. A permit to install new or replacement water supply piping from the public water supply system to and including the reduced pressure backflow preventer, or pressure vacuum breakers, as the case may be, shall be issued only to a registered master plumber contractor or homeowner complying with Section 24.10.030, 401.1 through 401.2, who shall be required to make application and pay fees as prescribed elsewhere in this code. Said plumber or homeowner shall call for inspections and be responsible for code compliance for his portion of the work. The irrigation contractor has the responsibility for the location and coordinating the proper installation of the backflow prevention device in relation to the irrigation system installation downstream from the backflow device.

1906.0 Permit to Install Irrigation System. A permit to install all water piping downstream of the backflow devices shall be issued to an irrigation contractor or homeowner complying with Section 24.10.030, 401.1 through 401.2. Application by the contractor shall also indicate the name of the registered master plumber contractor who will install the backflow prevention device. The irrigation contractor shall be required to make the permit application and pay the fees prescribed below. He shall call for inspections and be responsible for the work to be installed as shown on the

plans approved by the Administrative Authority. No inspection or permit is required for the repair of existing irrigation systems downstream from the backflow prevention device.

1907.0 Fees. The required fee for each underground irrigation system shall be included with each permit application filed with the Administrative Authority. A permit fee shall be paid based upon the size of backflow devices installed in the irrigation system as set forth below.

PERMIT FEES

SIZE OF BACKFLOW DEVICE	AMOUNT PER DEVICE
One inch and smaller	$ 25.00
One and one-fourth and one and one-half inch	50.00
Two inch	60.00
Three inch or larger	100.00
Additions to existing systems	12.00

1908.0 Installation.

1908.1 Underground irrigation systems when connected to a potable water supply or public water supply system shall be installed in accordance with these regulations. Underground irrigation systems shall be equipped with one or more pressure-type vacuum breakers or a reduced pressure backflow preventer to prevent back-siphonage or backflow. Pressure-type vacuum breakers and reduced pressure backflow preventers shall be of the type approved by the Lincoln Water System. The pressure vacuum breakers shall be installed not less than twelve inches above the highest underground sprinkler head and in no event less than twelve inches above the highest point of elevation of the surrounding front, rear, and/or side yard ground of the property being served.

1908.2 The potable water piping within the building and/or including the back-siphonage or backflow device or devices shall be of materials approved for water distribution in this code. Water piping within the underground irrigation system protected by backflow devices above described may be of any material approved by the Administrative Authority, including approved plastic piping. All irrigation system piping installed above ground shall be approved metallic pipe or approved plastic pipe protected from physical damage and sunlight.

1908.3 Electrically controlled irrigation systems shall be connected in accordance with the Lincoln Electrical Code. The control cabinet shall be wired direct or connected to a permanently installed grounded receptacle within six feet of the controller and with a three wire cord not exceeding six feet in length and approved for heavy duty use.

1908.4 Underground irrigation system installations shall be inspected by the Administrative Authority to ensure compliance with the requirements of this code and with Chapter 14.92 of the Lincoln Municipal Code. It shall be the duty of the person doing the work authorized by the permit to notify the Administrative Authority orally or in writing that said work is ready for inspection, and for said person doing the work to provide access and means for proper inspection. It shall be the duty of the person doing the work to call for inspection of the irrigation system installation not later than three days after the completion of the installation.

1908.5 The initial and any required subsequent inspection, testing, and repair of the backflow prevention devices shall be administered by the Lincoln Water System in accordance with Title 17, Section 17.18.080 of the Lincoln Municipal Code.

1909.0 Certificate of Insurance.

1909.1 Before any irrigation system contractor may be issued a permit under the provisions of this code, such contractor shall be required to:

(1) At all times maintain public liability insurance coverage for all claims arising out of all work in the City of Lincoln and within three miles of the corporate limits thereof done by or under the supervision of the irrigation system contractor under the provisions of this code. Such insurance shall be in the form of a commercial or comprehensive general liability policy, or an acceptable substitute policy form as permitted by the City Attorney, with a minimum combined single limit of $500,000.00 aggregate for any one occurrence on any job for which a permit is required under this code, provided the City of Lincoln shall be named an additional insured thereunder. The coverages required herein shall be subject to review and approval by the City Attorney for conformance with the provisions of this section.

(2) At all times keep on file with the Administrative Authority a current certificate of insurance signed by a qualified agent of an insurance company licensed to do business in the State of Nebraska and approved by the City Attorney for conformance with the provisions of this section evidencing the existence of valid and effective policies of insurance naming the city as an additional insured for the coverage required by subsection (1) of this section, the limits of each policy, the policy number, the name of the insurer, the effective date and expiration date of each policy, the deductibles or self-insurance retainers of each policy, and a copy of an endorsement placed on each policy requiring thirty days notice by mail to the Administrative Authority before the insurer may cancel the policy for any reason, and upon request of the Administrative Authority or the City Attorney, a copy of any endorsements placed on such policies or the declarations page of such policies. Any termination, reduction, or lapse of such insurance shall automatically terminate the privilege of the irrigation system contractor to be issued permits under the provisions of this code, unless other insurance meeting the requirements of this section is provided and in full force and effect at the time of such termination or cancellation.

1910.0 Violations and Penalties.

1910.1 Any person, firm, or corporation violating any of the provisions of this code shall be deemed guilty of a misdemeanor, and each such person shall be deemed guilty of a separate offense for each and every day or portion thereof during which any violation of any of the provisions of this code is committed, continued, or permitted; and upon conviction of any such violation, such person shall be punishable by a fine in any sum not to exceed $500.00, or be imprisoned in the county jail for a period not to exceed six months, or both; except that each person so convicted shall be fined in a sum of not less than $200.00 for the first offense, not less than $250.00 for a second offense, and not less than $300.00 for the third offense and each offense thereafter.

1910.2 Any plumbing or drainage work or equipment which is installed, operated, or maintained in violation of this code is hereby declared to be a nuisance. (Ord. 19658 §89; December 12, 2011).

24.10.450 Chapter 20 Added; Hydronics.

The Uniform Plumbing Code is amended by adding a new Chapter 20 to read as follows:

CHAPTER 20
HYDRONICS

Part I – Steam and Water Piping.

2001.0 Scope. Steam and water piping systems that are part of a heating or cooling system shall comply with the following requirements:

2001.1 Those portions of piping systems in which the pressure exceeds 160 psig or the temperature exceeds 250°F shall comply with nationally recognized standards.

2001.2 Those portions of piping systems in which the pressure does not exceed 160 psig and the temperature does not exceed 250°F shall comply with the following requirements:

2001.2.1 Materials and Construction.

2001.2.1.1 Pipe. Pipe shall be brass, copper, galvanized or black wrought iron, galvanized or black steel, or other approved materials. Minimum Schedule 40

2001.2.1.2 Tubing. Tubing shall be copper water tube. Minimum Type L

2001.2.1.3 Valves. Valves up through two (2) inches in size shall be brass, malleable iron, or steel bodies. All valves shall be full port type with working parts of noncorrosive metal.

2001.2.1.4 Fittings.

2001.2.1.4.1 Plain screwed fittings shall be brass, bronze, cast-iron, galvanized or black malleable iron, or galvanized or black steel.

2001.2.1.4.2 Fittings for copper tubing shall be wrought copper, wrought bronze, or cast brass.

2001.2.1.4.2.1 Mechanically Formed Tee Fittings. Mechanically extracted collars shall be formed in a continuous operation consisting of drilling a pilot hole and drawing out the tube surface to form a collar having a height not less than three times the thickness of the branch tube wall. The branch tube shall be notched to conform with the inner curve of the run tube and have two dimple/depth stops to ensure that penetration of the branch tube into the collar is of sufficient depth for brazing and that the branch tube does not obstruct the flow in the main line tube. Dimple/depth stops shall be in line with the run of the tube. The second dimple shall be one-fourth (1/4) inch above the first and shall serve as a visual point of inspection. All joints shall be brazed in accordance with Section 212.0. Soft soldered joints shall not be allowed.

2001.2.1.4.3 Welding fittings shall be black steel. Minimum Schedule 40

2001.2.1.5 Pipe Joint Compound. Pipe joint compound shall be noncorrosive and insoluble in the material being carried in the pipe.

2001.2.1.6 Protective Coatings. Protective coatings shall be watertight, durable, heat resistant, electrically nonconductive, and tightly adherent to the pipe.

2001.2.1.7 Fluxes. Fluxes for solder, sweat, and brazed joints shall be a noncorrosive type and suitable for the use intended.

2001.2.1.8 Insulation. Coverings and insulation used for hot water pipes shall be of material suitable for the operating temperature of the system. The insulation, jackets, and lap-seal adhesives, including pipe coverings and linings, shall have a flame spread index not greater than twenty-five (25) and a smoke-developed index not greater than fifty (50) when tested in accordance with NFPA 255, *Method of Test of Burning Characteristics of Building Materials*; or in accordance with ASTM E 84, *Surface Burning Characteristics of Building Materials*; or in accordance with the provisions of UL 723, *Test for Surface Burning Characteristics of Building Materials*. The specimen preparation and mounting procedures of ASTM E 2231, *Specimen Preparation and Mounting of Pipe and Duct Insulation Materials to Assess Surface Burning Characteristics* shall be used. Alternately, materials used for pipe coverings and insulation (including the insulation, jacket, and lap-seal adhesives) shall have a maximum peak heat release rate of 300 kW, a maximum total heat release of 50 MJ, a maximum total smoke release of five-thousand, three-hundred and eighty-two (5,382) square feet and shall not generate flames that extend one (1) foot or more above the top of the vertical portion of the apparatus at any time during the test when tested in accordance with NFPA 274, *Standard Test Method to Evaluate Fire Performance Characteristics of Pipe Insulation*.

Insulation coverings and linings shall not flame, glow, smolder, or smoke when tested in accordance with ASTM C 411, *Hot-Surface Performance of High Temperature Thermal Insulation*, at the temperature to which they are exposed in service. In no case shall the test temperature be below 250°F.

2001.2.1.9 Flashing Material. Flashings shall be lead, copper, galvanized iron, or other approved materials.

2001.2.1.10 Gaskets. Flange gaskets shall be metal, fiber suitable for service, temperature, and pressure, or other approved materials.

2001.2.1.11 Hangers and Anchors. Hangers and anchors shall be suitable for the use intended.

2001.2.1.12 Sleeves. Sleeves shall be of steel, cast-iron or wrought-iron pipe, or tile.

2001.2.1.13 Standards. All piping, tubing, valves, joints, fittings, devices, and materials shall be free of defects and comply with nationally recognized standards.

2001.2.1.14 Marking. Materials and devices shall be suitably identified. In addition to the incised marking required in the standards, all hard-drawn copper tubing shall be marked. Color coding shall be as follows:

Type L – Blue
Type K – Green
Type M – Red
Type ACR – Blue
Type DWV – Yellow

2001.2.2 Fabrication of Joints. Joints shall be made by the use of fittings except as otherwise permitted in this chapter.

2001.2.2.1 Screwed Joints. Threads on iron pipe size (IPS pipe) shall be standard taper pipe threads. All burrs shall be removed. Pipe ends shall be reamed or filed out to the full size of bore, and all chips shall be removed.

2001.2.2.2 Solder Joints. Surfaces to be joined by soldering shall be cleaned bright by manual or mechanical means. The joints shall be properly fluxed using a listed soldering flux. Tubing shall be reamed out to the full size of bore.

2001.2.2.3 Welded Joints. Welding shall be performed in accordance with ASME "Boiler and Pressure Vessel Code," Section IX "Welding and Brazing Qualifications."

2001.2.2.4 Flanged Joints. Flanged joints shall be tightened evenly and provided with suitable nuts, bolts, and gaskets.

2001.2.2.5 Mechanical Joints. Mechanical joints shall comply with nationally recognized standards.

2001.2.3 Connections.

2001.2.3.1 Brass and Copper Piping. Joints in brass and copper piping shall be threaded, brazed, welded, flanged, soldered or mechanical type.

2001.2.3.2 Reserved.

2001.2.3.3 Galvanized Wrought-Iron and Galvanized Steel Piping. Joints in galvanized wrought-iron and galvanized steel piping shall be threaded, flanged, or mechanical type.

2001.2.3.4 Black Wrought-Iron Piping. Joints in black wrought-iron piping shall be threaded, brazed, welded, flanged, or mechanical type, except that joints built into or embedded in concrete or masonry shall be welded.

2001.2.3.5 Black Steel Piping. Joints in black steel piping shall be threaded, brazed, welded, flanged, or mechanical type.

2001.2.3.6 Copper Water Tubing. Joints in copper tubing shall be soldered, brazed or flared, except that joints under a building and in or under any concrete slab resting on the ground shall be silver brazed, or equal, and fittings shall be of wrought copper. Mechanically formed tee fittings are also acceptable when brazed and installed in accordance with Section 2001.2.1.4. All solder joints shall be made with solders meeting the standard for solder metal. However, if steam pressures exceed fifteen (15) psig or water pressures exceed thirty (30) psig then 50 percent tin - 50 percent lead solder shall not be used. Solders and fluxes with a lead content which exceeds two-tenths (0.20) of 1 percent shall be prohibited in piping systems conveying potable water.

2001.2.3.7 Piping to Tubing. Joints connecting piping to tubing shall be made with adapter fittings connected as required in Sections 2001.2.3.1 through 2001.2.3.7.

2001.2.4 Changes in Direction. Changes in direction shall be made by the appropriate use of fittings, except that changes in direction in copper tubing may be made with bends having a radius not less than six (6) diameters of the tubing, provided that such bends are made by the use of forming equipment that does not deform or reduce appreciably the cross-sectional area of the tubing.

2001.2.5 Changes in Pipe Sizes. Where different sizes of pipe or pipe and fittings are to be connected, the proper size increasers or reducer fittings shall be used between the two sizes. When the branch is at least two sizes smaller than the main, weldolets or threadolets may be used in lieu of welding tees. Bushings shall not be used. Eccentric reducing fittings shall be used wherever necessary to provide free drainage of lines.

2001.2.6 Hangers and Supports. All piping and equipment shall be adequately supported to the satisfaction of the Authority Having Jurisdiction. Hot-water and steam piping shall be supported, anchored, and provided with swing joints, expansion loops or joints, or other means to avoid excessive strain on piping, equipment, or the building structure to the satisfaction of the Authority Having Jurisdiction.

2001.2.6.1 Vertical Piping - Attachment. Vertical piping and tubing shall be secured at sufficiently close intervals to keep the pipe in alignment and carry the weight of the pipe and contents.

2001.2.6.2 Horizontal Piping.

2001.2.6.2.1 Supports. Horizontal piping and tubing shall be supported at sufficiently close intervals to keep it in alignment and prevent excessive sagging.

2001.2.6.2.2 In Ground. Piping and tubing in the ground shall be laid on a firm bed for its entire length except when otherwise approved by the Authority Having Jurisdiction. Cement piping shall be provided with adequate thrust blocking.

2001.2.7 Installation.

2001.2.7.1 Same Materials Required. All piping materials used, except valves and similar devices, shall be of a like material, except as otherwise acceptable to the Authority Having Jurisdiction.

2001.2.7.2 Wall Thickness.

2001.2.7.2.1 Piping shall be at least standard-weight brass or copper, Class 150 cast-iron, standard-weight wrought iron, ASTM Schedule 40 steel.

2001.2.7.2.2 Tubing shall be at least Type K - for condensate return lines; Type K - for steam condenser cooling water lines, underground water lines, and aboveground water lines; Type L - for aboveground water lines not embedded in concrete or masonry.

2001.2.7.3 Piping Embedded in Structure. Piping shall not be built into or embedded in concrete or masonry, except where used for radiant panel heating or cooling. Black steel pipe, wrought-iron piping, or Type L copper tubing may be so embedded.

2001.2.7.4 Cutting Structure. Structural members shall not be seriously weakened or impaired by cutting or notching.

2001.2.7.5 Providing for Expansion, Contraction, and Settling. Piping shall be installed so that piping, connections, and equipment shall not be subjected to excessive strains or stresses, and provisions shall be made for expansion, contraction, shrinkage, and structural settlement.

2001.2.7.6 Circulation. Piping shall provide adequate circulation. Piping shall be graded so that all gases can move in the direction of the water flow to a vented section of the system. When sections of a piping system cannot be installed with the required grade, such sections shall be provided with automatic or manual air vents whose discharge is piped to an approved location. Steam traps shall be provided where required.

2001.2.7.7 Underground Piping.

2001.2.7.7.1 Cinders and Other Corrosive Material Fills. All piping passing through or under cinders or other corrosive fill materials shall be suitably protected from corrosion.

Exception: Where a soil analysis by an acceptable testing laboratory shows the soil to be free of materials that may corrode the pipe to be installed, the requirements for protective coatings may be waived.

2001.2.7.7.2 Beneath Buildings. Piping installed within a building and in, or under, a concrete floor slab resting on the ground shall be installed as follows:

Ferrous Piping. Ferrous piping shall be galvanized and covered with an approved protective coating.

Copper Tubing. Copper tubing shall be installed without joints, where possible.

2001.2.7.7.3 Outside of Buildings.

Black Wrought Iron and Black Steel. Black wrought-iron and black steel piping shall be protected against corrosion by an approved pipe wrapping.

2001.2.7.7.4 Under Walls or Foundations. Piping passing under walls or foundations shall be protected from breakage.

2001.2.7.7.5 Openings into Buildings. Voids around piping passing through concrete or masonry floors or walls shall be appropriately sealed at the opening into the building. Sleeves shall be provided at such openings.

2001.2.7.8 Above ground Piping.

2001.2.7.8.1 Sleeves. Sleeves shall be provided to protect all piping through concrete and masonry walls.

2001.2.7.8.2 Insulation. The temperature of surfaces within normal reach of building occupants shall not exceed 140°F unless they are protected by suitable insulation. Where sleeves are installed, any insulation shall continue full-sized through them.

2001.2.7.8.3 Lining. Combustible portions of unventilated spaces that contain piping or devices whose outside temperature, including insulation, exceeds 140°F , shall be lined with No. 24 gauge (0.021 inch) steel, or one-fourth (1/4) inch thick insulating millboard.

2001.2.7.8.4 Clearance. There shall be at least one (1) inch clearance from the structure around steam pipes.

2001.2.7.8.5 Exposed Piping. Exposed piping subject to excessive corrosion, erosion, or mechanical damage shall be suitably protected.

2001.2.7.8.6 Roof and Wall Openings. Joints at the roof around pipes or appurtenances shall be made water-tight by the use of approved flashings or flashing material. Exterior wall openings shall be made water-tight.

2001.2.7.8.7 Drainage. Means shall be provided to drain all piping.

2001.2.7.8.8 Freezing. Where required, piping outside of a building or in an exterior wall shall be protected from freezing.

2001.2.7.9 Trenches and Tunnels.

2001.2.7.9.1 Protection of Structure. Trenches deeper than the footings of a building or structure and paralleling the same shall be at least 45 degrees therefrom, or approved per Section 105.0.

2001.2.7.9.2 Mechanical Equipment. Use of mechanical excavating equipment is prohibited within two (2) feet of existing piping or appurtenances.

2001.2.7.9.3 Reserved.

2001.2.7.9.4 Backfilling. Excavations shall be completely backfilled as soon after inspection as practicable. Adequate precaution shall be taken to ensure proper compaction of backfill around piping without damage to such piping. Trenches shall be backfilled in thin layers to twelve (12) inches above the top of the piping with clean earth that shall not contain stones, boulders, cinderfill, or other materials that would damage, break the piping, or cause corrosive action. Mechanical devices, such as bulldozers, graders, etc., may then be used to complete backfill to grade. Fill shall be properly compacted. Suitable precautions shall be taken to ensure permanent stability for pipe laid in filled or made ground.

2001.2.8 Pressure Testing.

2001.2.8.1 Responsibility. The equipment, material, and labor necessary for inspection or test shall be furnished by the person to whom the permit is issued or by whom inspection is requested.

2001.2.8.2 Media. The piping shall be tested with water.

2001.2.8.3 Pressure Test. Piping shall be tested with a hydrostatic pressure of not less than 100 psig but at least fifty (50) psig greater than operating pressure. This pressure shall be maintained for at least thirty (30) minutes. Required tests shall be conducted by the owner or contractor in the presence of an authorized inspector. The piping being tested shall remain exposed to the inspector and shall not leak during the test.

2001.2.8.4 Moved Structures. Piping systems of a building and parts thereof that are moved from one foundation to another shall be completely tested as prescribed elsewhere in this section for new work, except that walls or floors need not be removed during such test when equivalent means of inspection are provided.

2001.2.8.5 Test Waived. No test or inspection shall be required where a system, or part thereof, is set up for exhibition purposes and has no connection with a water system.

2001.2.8.6 Exceptions. In cases where it would be impractical to provide the aforementioned tests, or for minor installations and repairs, the Authority Having Jurisdiction shall have the authority to make such inspection as it deems necessary.

2001.3 Those portions of the hot water piping systems in which the continuous pressure-temperature relationship does not exceed the following may be constructed of cross-linked polyethylene (PEX) tubing of SDR-9 conforming to specifications ASTM F876 and F877.

Temperature		Pressure	
°F	(C)	Psi	(Kpa)
73	(23)	160	(1,103)
180	(82)	100	(689)
200	(93)	80	(550)

2001.3.1 Materials and Construction.

2001.3.1.1 PEX Tubing. Tubing shall be copper tube size, SDR-9 cross-linked polyethylene conforming to ASTM F876. PEX tubing and fittings shall be installed in accordance with the manufacturers' recommended installation instructions.

2001.3.1.2 Fittings. Fittings shall be manufactured and tested in accordance with the nationally recognized standards.

2001.3.1.3 Insulation. Coverings and insulation used for hot water pipes shall be of material suitable for the operating temperature of the system. The insulation, jackets, and lap-seal adhesives, including pipe coverings and linings, shall have a flame spread index not greater than twenty-five (25) and a smoke-developed index not greater than fifty (50) when tested in accordance with NFPA 255, *Method of Test of Burning Characteristics of Building Materials*; or in accordance with ASTM E 84, *Surface Burning Characteristics of Building Materials*; or in accordance with the provisions of UL 723, *Test for Surface Burning Characteristics of Building Materials*. The specimen preparation and mounting procedures of ASTM E 2231, S*pecimen Preparation and Mounting of Pipe and Duct Insulation Materials to Assess Surface Burning Characteristics* shall be used. Alternately, materials used for pipe coverings and insulation (including the insulation, jacket, and lap-seal adhesives) shall have a maximum peak heat release rate of 300 kW, a maximum total heat release of 50 MJ, a maximum total smoke release of 500 m2 and shall not generate flames that extend one (1) foot or more above the top of the vertical portion of the apparatus at any time during the test when tested in accordance with NFPA 274, *Standard Test Method to Evaluate Fire Performance Characteristics of Pipe Insulation*. Insulation coverings and linings shall not flame, glow, smolder, or smoke when tested in accordance with ASTM C 411, *Hot-Surface Performance of High Temperature Thermal Insulation,* at the temperature to which they are exposed in service. In no case shall the test temperature be below 250°F.

2001.3.1.4 Hangers, Sleeves, and Anchors. Hangers, sleeves, and anchors shall be suitable for the use intended as recommended by the manufacturers' installation instructions.

2001.3.1.5 Standards. All piping, tubing, and fitting materials shall be free of defects and comply with nationally recognized standards approved by the Authority Having Jurisdiction.

2001.3.1.6 Marking. Materials and devices shall be suitably identified.

2001.3.2 Fabrication of Joints. All joining methods shall meet the performance requirements set forth in ASTM F877. Joints shall be made by one or more of the following methods:

2001.3.2.1 Crimp/Insert Fittings. Insert fittings of metal with crimp rings of copper may be used.

2001.3.2.2 Compression Fittings. Metallic fittings utilizing compression seals are acceptable.

2001.3.2.3 Cold Expansion Fittings. Cold expansion fittings utilizing a PEX reinforcing ring or metal compression sleeve may be used.

2001.3.2.4 Transition Fittings. Connections to other piping materials shall be made of approved types of special transition fittings.

2001.3.3 Changes in Direction. Changes in direction shall be made by the appropriate use of fittings or with pipe bends having a radius of not less than six (6) times the outside diameter of the tubing. No forming equipment or heating is required.

2001.4 Those portions of the hot water piping systems in which the continuous pressure temperature relationship does not exceed the following shall be permitted to be constructed of cross-linked polyethylene/aluminum/cross-linked polyethylene (PEX-AL-PEX) piping conforming to specification ASTM F1281.

Temperature		Pressure	
°F	**(C)**	**Psi**	**(Kpa)**
73	(23)	200	(1,380)
180	(82)	125	(862)
200	(93)	100	(690)

2001.4.1 Materials and Construction.

2001.4.1.1. PEX-AL-PEX. Piping shall be cross linked polyethylene/aluminum/ cross linked polyethylene conforming to ASTM F 1281. PEX-AL-PEX piping and fittings shall be installed in accordance with the manufacturers'recommended installation instructions.

2001.4.1.2 Fittings. Fittings shall be manufactured and tested in accordance with the nationally recognized standards.

2001.4.1.3 Insulation. Coverings and insulation used for hot water pipes shall be of materials suitable for the operating temperature of the system. The insulation, jackets, and lap-seal adhesives shall be tested as a composite developed rating of not more than fifty (50) when tested in accordance with Building Code standards.

2001.4.1.4 Hangers, Sleeves, and Anchors. Hangers, sleeves, and anchors shall be suitable for the use intended as recommended by the manufacturers' installation instructions.

2001.4.1.5 Standards. All piping and fitting materials shall be free of defects.

2001.4.1.6 Markings. Materials and devices shall be suitably identified.

2001.4.2 Fabrication of Joints. All joining methods shall meet the performance requirements set forth in ASTM F1281. Joints shall be made by one or more of the following methods:

2001.4.2.1 Crimp/Insert Fittings. Insert fittings of metal with crimp rings of copper may be used.

2001.4.2.2 Mechanical Compression Fittings. Metallic fittings utilizing a split ring and compression nut are acceptable.

2001.4.2.3 Transition Fittings. Connections to other piping materials shall be made of approved types of special transition fittings.

2001.4.3 Changes in Direction. Changes in direction shall be made by fittings or with pipe bends having a radius of not less than five (5) times the outside diameter of the piping. No forming equipment or heating is required.

Part II – Hydronic Panel Heating Systems

2002.0 Scope. The purpose of this part is to establish and provide minimum standards for the protection of public health, welfare, and property by regulating and controlling the design and installation of panel heating systems.

2003.0 Installation.

2003.1 Panel systems shall be designed and installed in accordance with the requirements of this code.

2003.2 Piping to be embedded in concrete shall be pressure-tested prior to pouring concrete. During pouring, the pipe shall be maintained at the proposed operating pressure.

2004.0 Piping Materials.

2004.1 Panel(s). Piping for heating panels shall be standard-weight steel pipe, Type L copper tubing, or approved plastic pipe or tubing rated at 100 psi at 180°F.

2004.2 Hot-Water Supply Lines. Piping for hot water supply lines shall be installed in accordance with the requirements of this code.

2005.0 Piping Joints. Joints of pipe or tubing forming the panel that are embedded in a portion of the building, for example, concrete or plaster, shall be in accordance with the following:

2005.1 All welding shall be performed in accordance with ASME "Boiler and Pressure Vessel Code," Section IX "Welding and Brazing Qualifications."

2005.2 Copper tubing joined with brazing alloys having a melting point above 1,000°F..

2006.0 Heat Sources. Heat sources for generating hot water for use in hydronic panel radiant heating systems shall include conventional fossil fuel, hot water boilers, electrical resistance heated boilers, air/water or water/water heat pumps, or solar heat collector systems. The latter system may include booster or backup heating units. Systems shall be protected by pressure-temperature relief valves as outlined in this code.

2007.0 Testing. Approved piping or tubing installed as a portion of a radiant panel system that will be embedded in the walls, floors, or ceilings of the building it is designed to heat shall be tested for leaks by the hydrostatic test method by applying at least 100 psi water pressure or 1.5 times the operating pressure, whichever is greater. For metal piping, a pressure gauge shall be connected to the piping, and after the pressure has been raised, the hydrostatic pressure connection shall be discontinued and the systems under pressure shall remain at the test pressure for a sufficient period of time to determine whether any leaks exist in the system. Leaks shall be indicated by the pressure drop on the gauge. The minimum test period shall be thirty (30) minutes. For flexible plastic piping, the test pressure shall be applied for a period of thirty (30) minutes. During this time, the system shall be maintained at the test pressure by the periodic addition of makeup water to compensate for the initial stretching of the pipe. The system shall then be visually inspected for tightness. Tests for tightness of radiant piping systems shall be witnessed by the Authority Having Jurisdiction.

In addition a geothermal system from the loop header inside or outside the building shall comply with the following requirements: The Header and valves connected to the well or loop field are within the scope of this code.

2007.1 Flushing. All hydronic piping systems shall be thoroughly flushed before the system is commissioned.

Note: Purge block shall be located at the building entrance
(foundation wall or basement floor)

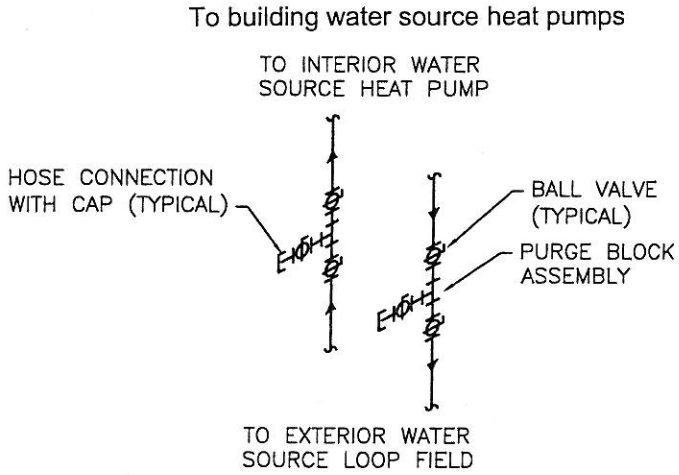

(Ord. 19658 §90; December 12, 2011).

24.10.455 Appendix D, Table D-1, State of Nebraska, Amended; Sizing Stormwater Drainage Systems.

Appendix D, Table D-1, State of Nebraska, of the Uniform Plumbing Code is amended to read as follows:

TABLE D-1

Maximum Rates of Rainfall for Various Cities

States and Cities	**Storm Drainage 60-Minute Duration, 100-Year Return**	
NEBRASKA	**Inches/Hour**	**GPM/Square Foot**
Omaha	3.6	0.037
Lincoln	6.0	0.062
North Platte	3.5	0.036
Scottsbluff	2.8	0.029

(Ord. 19658 §91; December 12, 2011).

24.10.460 Appendix E 9 Amended; M/H Lot Drainage Inlet and Lateral.

Appendix E 9 of the Uniform Plumbing Code is amended to read as follows:

E 9 M/H Lot Drainage Inlet and Lateral.

(a) Size. Each lot shall be provided with a drainage inlet not less than four (4) inches in diameter.

(b) The lateral line from the inlet to the sewage drain line shall slope at least one-fourth (1/4) inch per foot All joints shall be watertight.

(c) All materials used for drainage connections between a M/H and the lot drainage inlet shall be semi-rigid, corrosion resistant, non-absorbent and durable. The inner surface shall be smooth.

(d) Provision shall be made for plugging or capping the sewage drain inlet when a M/H does not occupy the lot. Surface drainage shall be diverted away from the inlet. The rim of the inlet shall extend not more than four (4) inches above ground elevation. (Ord. 19658 §92; December 12, 2011).

24.10.465 Appendix E 11 Amended; Pipe Size.

Appendix E 11 of the Uniform Plumbing Code is amended to read as follows:

E 11 Pipe Size

(a) Each M/H lot drainage inlet shall be assigned a waste loading value of twelve (12) fixture units and each park drainage system shall be sized according to Table E-1 or as provided herein. Drainage laterals shall be not less than four (4) inches in diameter.

(b) A park drainage system which exceeds the fixture unit loading of Table E-1 or in which the grade and slope of drainage pipe does not meet the minimum specified in Table E-2 shall be designed by a registered professional engineer. (Ord. 19658 §93; December 12, 2011).

24.10.470 Appendix L 7.0 Added; Alternate Plumbing System Drawings.

The Uniform Plumbing Code is amended by adding Appendix L 7.0 to read as follows:

L 7.0 Alternate Plumbing System Drawings.

The following alternate plumbing system drawings are examples under the Uniform Plumbing Code: *(Drawings continued on next page)*. (Ord. 19658 §94; December 12, 2011).

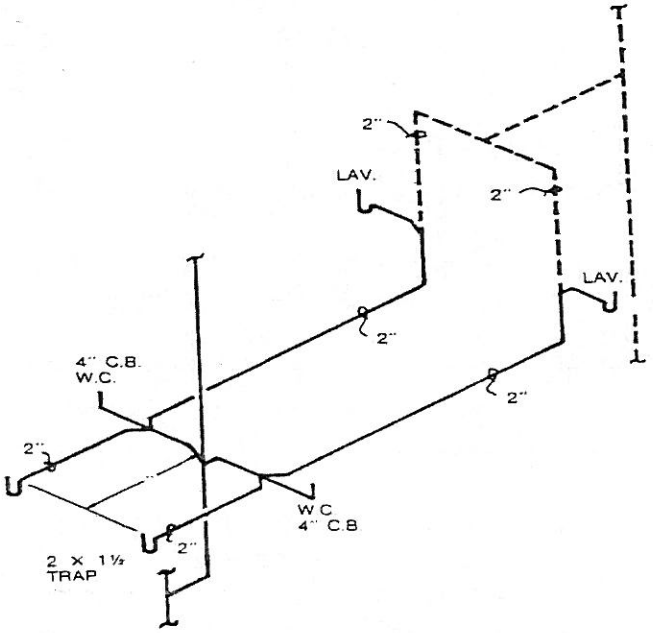

TYPICAL EXAMPLE OF 4" CLOSET BEND WITH TWO 2" WYE TAPS

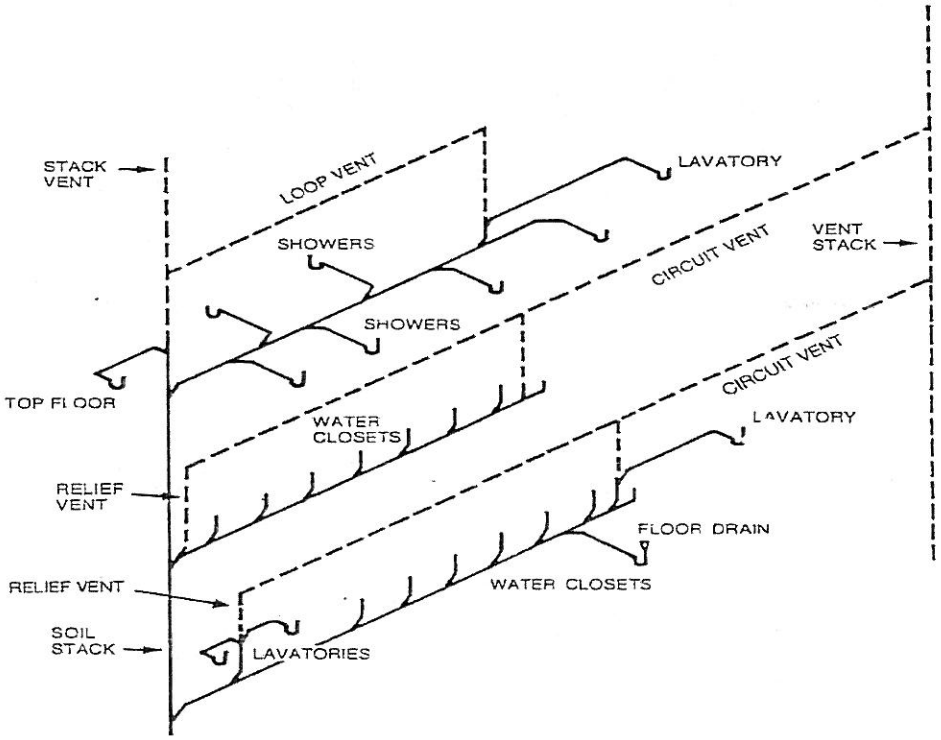

AN EXAMPLE OF BATTERY VENTING

NOTE: ALL HORIZONTAL BRANCHES ARE UNIFORMLY SIZED.

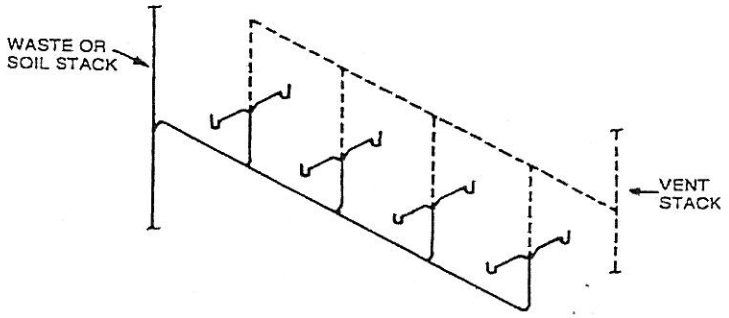

ONE EXAMPLE OF FIXTURES BACK-TO-BACK IN BATTERY

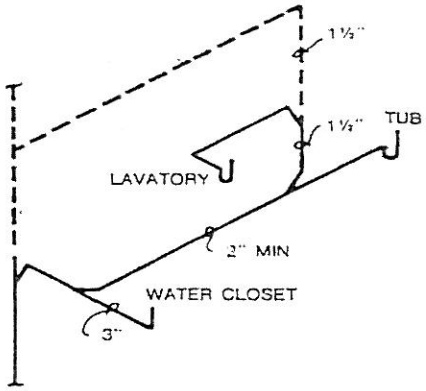

AN EXAMPLE OF A VENTED BATHROOM GROUP SINGLE STORY OR TOP FLOOR OF A MULTIPLE STORY STRUCTURE

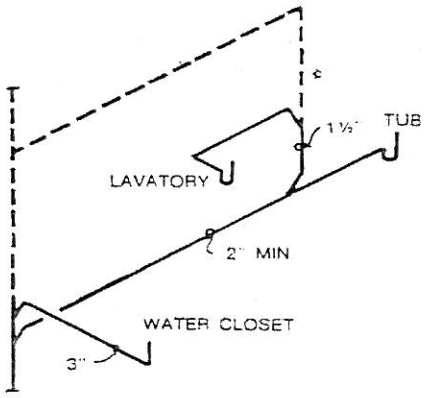

AN EXAMPLE OF A VENTED BATHROOM GROUP SINGLE STORY OR TOP FLOOR OF MULTIPLE STORY STRUCTURE

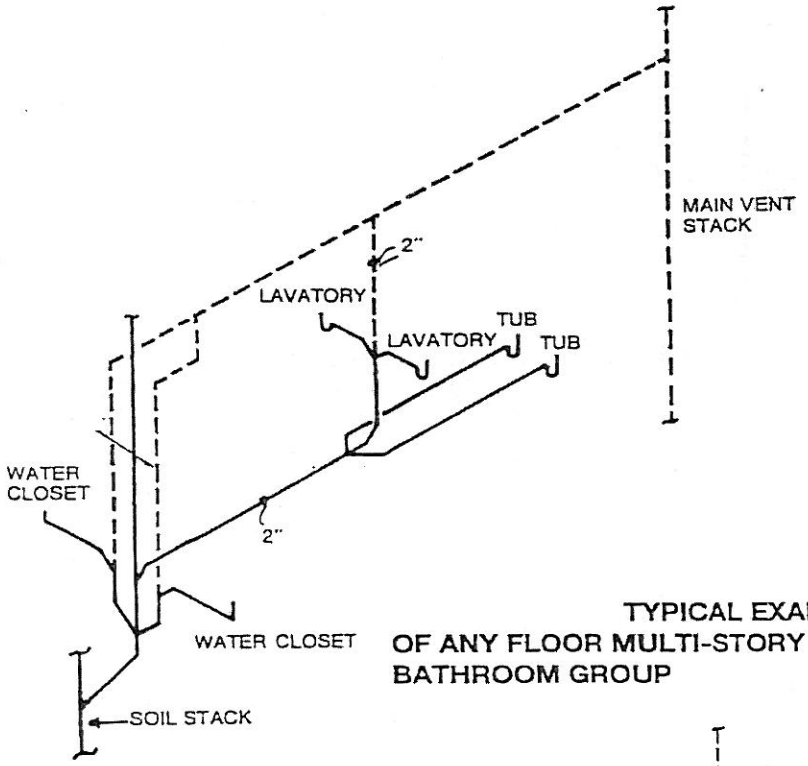

TYPICAL EXAMPLE
OF ANY FLOOR MULTI-STORY
BATHROOM GROUP

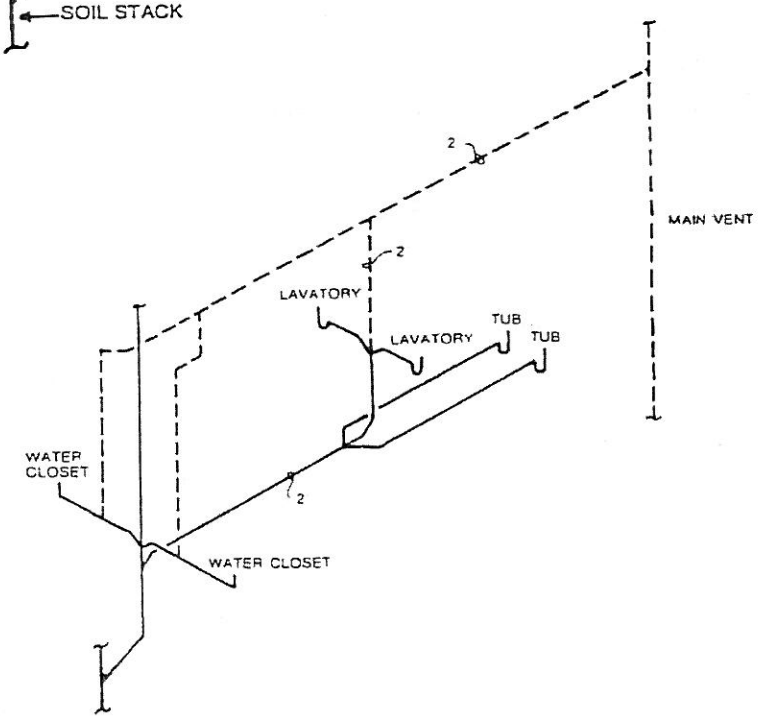

ANY FLOOR — MULTI-STORY BATHROOM GROUPS
TYPICAL ALTERNATE ARRANGEMENT

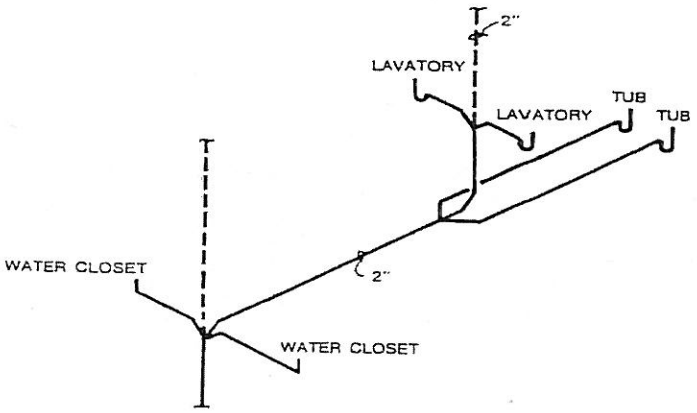

TYPICAL EXAMPLE OF A SINGLE STORY OR TOP FLOOR ONLY OF A MULTIPLE STORY STRUCTURE BACK TO BACK BATHROOM GROUPS

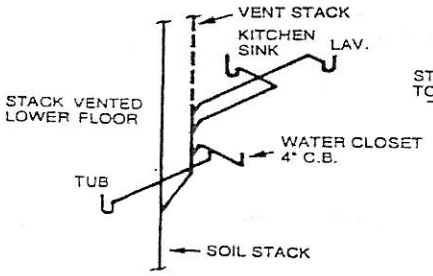

STACK
VENTING OF LOWER FLOORS — TYPICAL LAYOUT

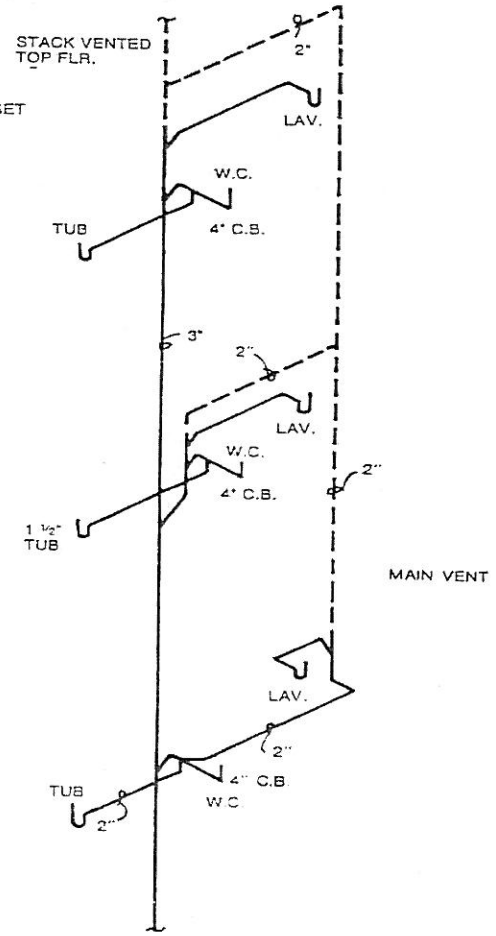

TYPICAL LAYOUT OF STACK VENTING LOWER FLOORS— WET VENTING ALSO SHOWN

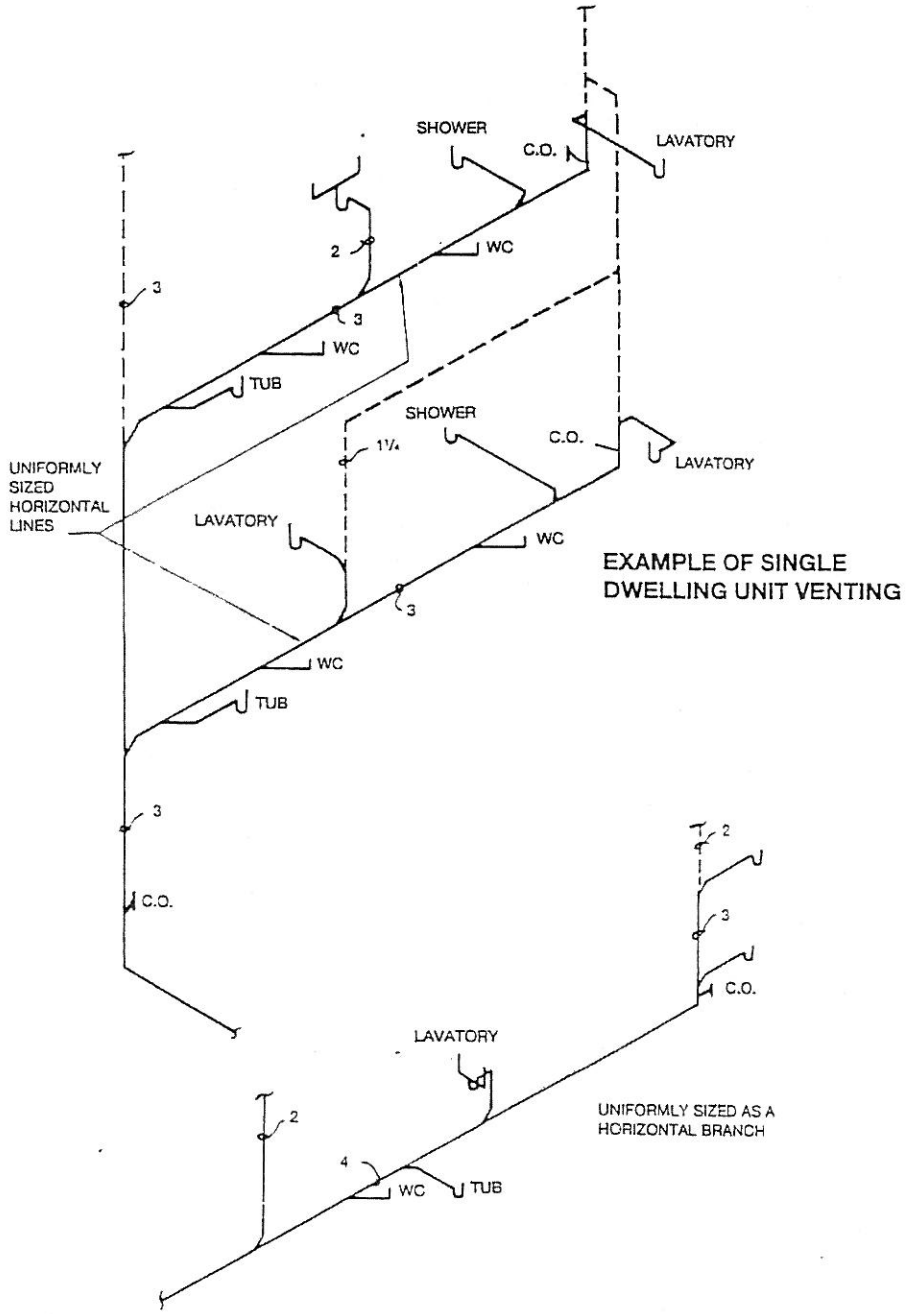

EXAMPLE OF SINGLE DWELLING UNIT VENTING

NOTE: VENT SIZING AS PER TABLE HORIZONTAL BRANCH LINES SHALL BE UNIFORMLY SIZED AS PER TABLE

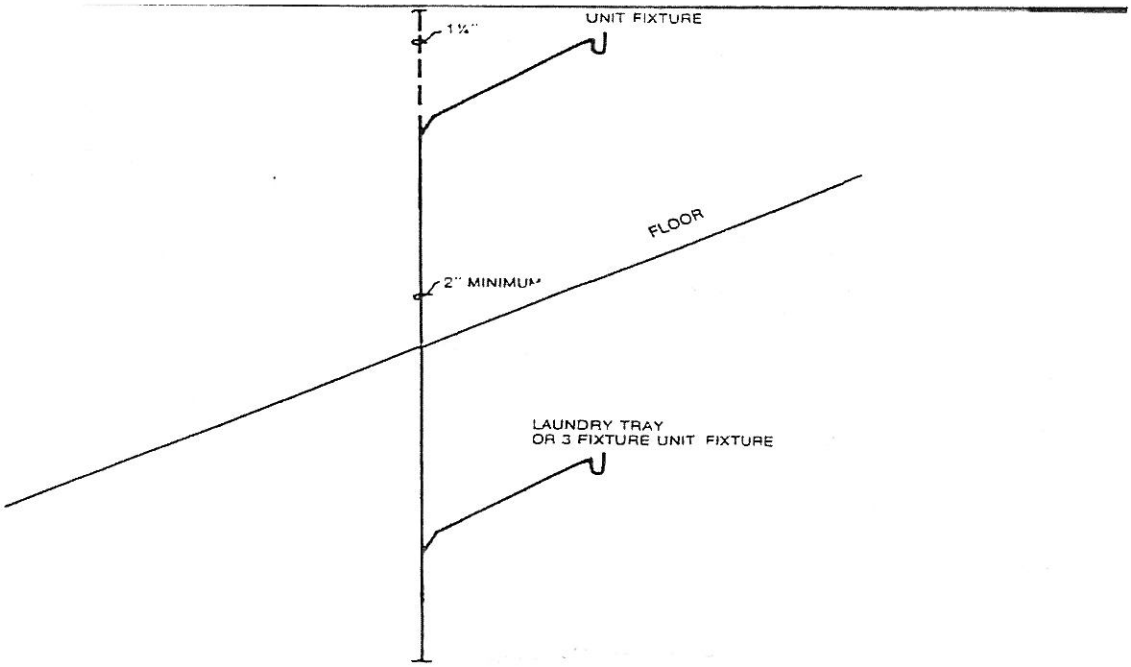

TYPICAL EXAMPLE OF WASTE STACKS SERVING KITCHEN SINKS—SINGLE DWELLING ONLY

NOTE: NO KITCHEN SINK MAY BE INSTALLED ON A 2" WET VENT WHICH VENTS A WATER CLOSET. HOWEVER WASTES FROM A LAVATORY MAY CONNECT

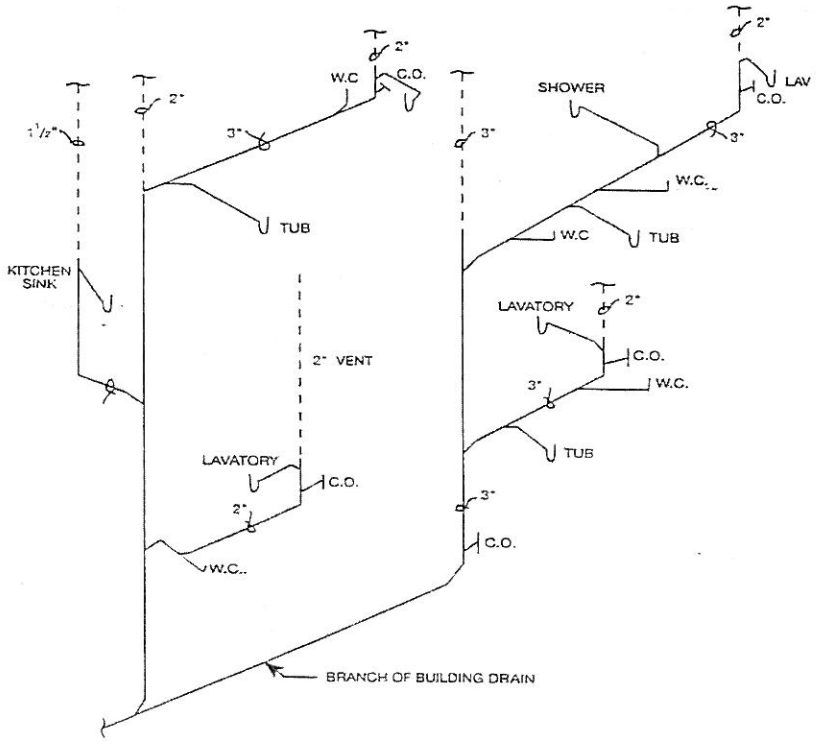

EXAMPLE OF SINGLE DWELLING UNIT VENTING

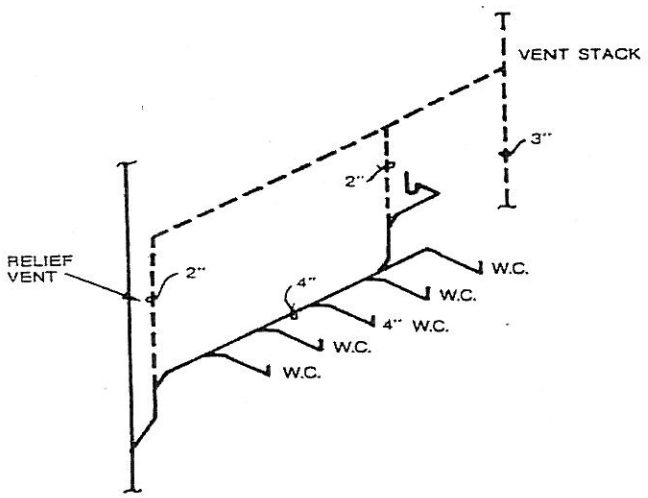

SIZING OF CIRCUIT OR LOOP VENT—TYPICAL EXAMPLE

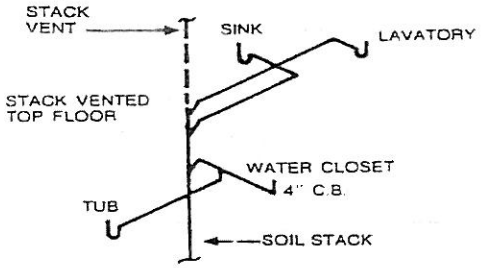

STACK VENTING—
TOP FLOOR—BATHROOM GROUP
AND KITCHEN—TYPICAL LAYOUT

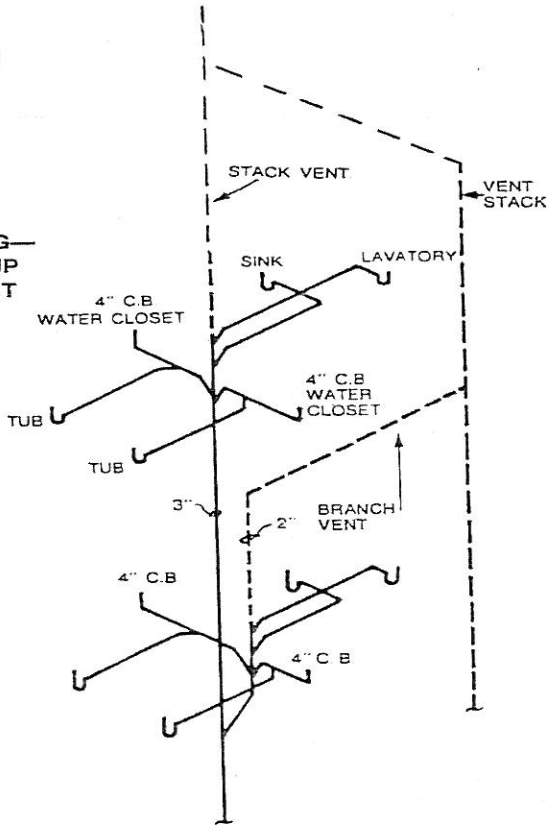

STACK VENTING—UPPER AND LOWER FLOORS—BACK-TO-BACK BATHROOM GROUPS AND KITCHENS—TYPICAL LAYOUT

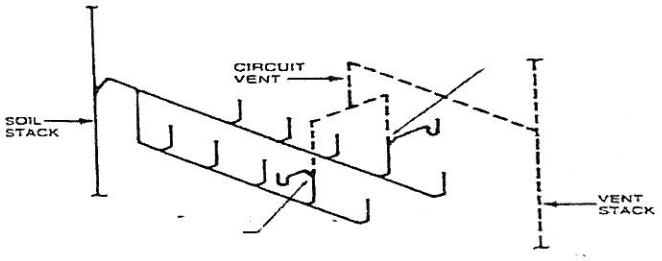

AN EXAMPLE OF DUAL BRANCHES

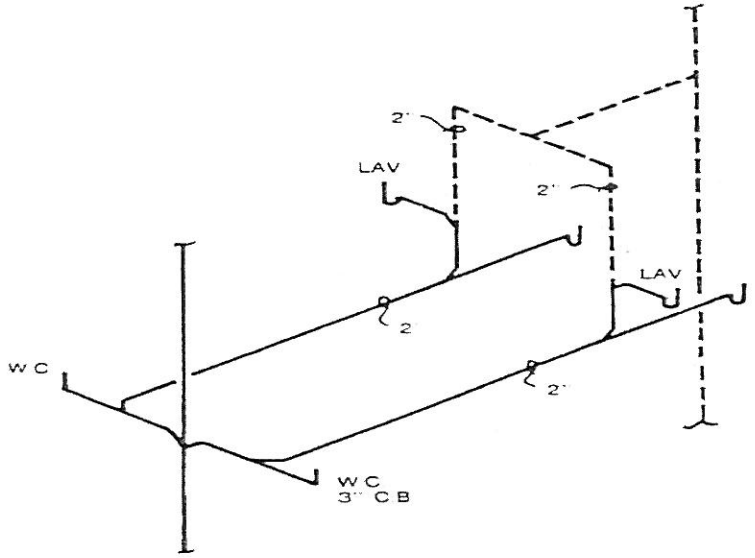

TYPICAL EXAMPLE OF 45°CONNECTION

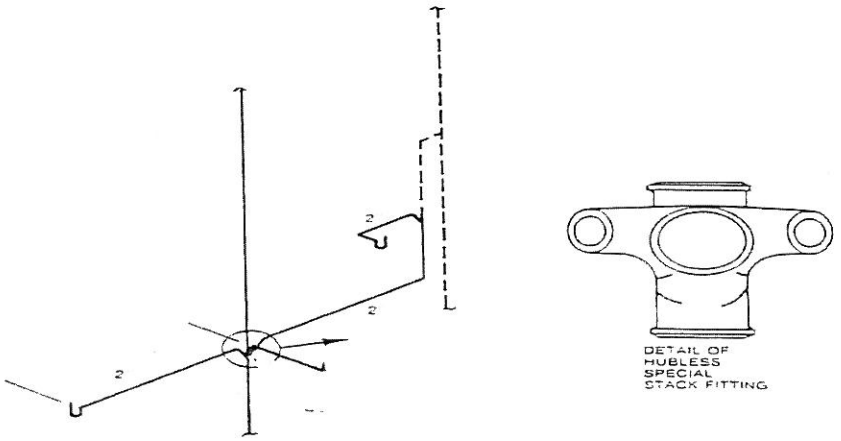

APPLICATION OF SPECIAL STACK FITTING — TYPICAL EXAMPLE